STR-W777

SERVICE MANUAL

AEP Model
UK Model
E Model
Australian Model

STR-W777 is the tuner and amplifier section in MHC-W777AV.

SPECIFICATIONS

Amplifier section

(Saudi Arabia, Singapore, Malaysia,Thai, Australian)
The following measured at AC 230V 50/60 Hz
DIN power output (Rated) (FRONT)
95 + 95W (6 Ω at 1kHz DIN)
Continuous RMS power output (Reference)
FRONT SPEAKER: 110 + 110W
(6 Ω at 1kHz, 10% THD)
CENTER SPEAKER: 55W
(8 Ω at 1kHz, 10% THD)
REAR SPEAKER: 35 + 35W
(8 Ω at 1kHz, 10% THD)
The following measured at AC 120, 220, 240V 50/60Hz
DIN power output (Rated) (FRONT)
100 + 100W (6 Ω at 1kHz DIN)
Continuous RMS power output (Reference)
FRONT SPEAKER: 120 + 120 W
(6 Ω at 1kHz, 10% THD)
CENTER SPEAKER: 60W
(8 Ω at 1kHz, 10% THD)
REAR SPEAKER: 40 + 40W
(8 Ω at 1kHz 10% THD)
Peak music power output 2400W

(AEP, UK, East European, CIS)
DIN power output (Rated) (FRONT)
80 + 80W (6 Ω at 1kHz DIN)
Continuous RMS power output (Reference)
FRONT SPEAKER: 100 + 100W
(6 Ω at 1kHz, 10% THD)
CENTER SPEAKER: 60W
(8 Ω at 1kHz, 10% THD)
REAR SPEAKER: 35 + 35W
(8 Ω at 1kHz, 10% THD)
Music power output (Reference)
FRONT SPEAKER: 190 + 190 W
(6 Ω at 1kHz, 10% THD)
CENTER SPEAKER: 90W
(8 Ω at 1kHz, 10% THD)
REAR SPEAKER: 55 + 55W
(8 Ω at 1kHz, 10% THD)

Inputs
MD/VIDEO 1 IN (phone jacks): voltage 450/250mV, impedance 47kΩ
AV INPUT AUDIO (phone jacks): voltage 250mV, impedance 47kΩ
MIX MIC (phone jack): sensitivity 1mV, impedance 10kΩ

— Continued on next page —

FM STEREO/FM-AM RECEIVER

MICROFILM

SONY®

Output	MD/VIDEO 1 OUT (phono jacks): voltage 450/250mV, impedance 1kΩ PHONES (stereo phone jack): accepts headphones of 8Ω or more. FRONT SPEAKER: accepts impedance of 6 to 16Ω CENTER SPEAKER: accepts impedance of 8 to 16Ω REAR SPEAKER: accepts impedance of 8 to 16Ω SUPER WOOFER: Voltage 1V, impedance 1kΩ

Video section

Inputs	AV INPUT VIDEO (phone jack): 1Vp-p, 75Ω
Outputs	MONITOR OUT (phone jack): 1Vp-p, 75Ω

Tuner section

FM stereo, FM/AM superheterodyne tuner

FM tuner section

Tuning range	
3 band type model	87.5 – 108.0MHz (50kHz step)
4 band type model	65.0 – 74.0MHz (10kHz step) 87.5 – 108.0MHz (50kHz step)
Aerial	FM lead aerial
Aerial terminals	75Ω unbalanced
Intermediate frequency	10.7MHz

UKV tuner section (4 band type model only)

Tuning range	65.0 – 74.0MHz (10kHz step) Polar Stereo

AM tuner section

Tuning range	
Australian model:	531 – 1,602kHz (with the AM tuning interval set at 9kHz) 530 – 1,710kHz (with the AM tuning interval set at 10kHz)
Other models:	MW: 531 – 1,602kHz (with the MW tuning interval set at 9kHz) 530 – 1,710kHz (with the MW tuning interval set at 10kHz) SW: 5.95 – 17.90MHz (with the SW tuning interval set at 5kHz) LW: 153 – 279kHz (with the interval set at 3kHz)
Intermediate frequency	450kHz
Antenna	AM loop antenna External antenna terminal

General

Power requirements	
Australian models:	240V AC, 50/60Hz
AEP, UK, East European, CIS models:	230V AC, 50/60Hz
Other models:	120V or 220V or 230 – 240, 50/60Hz Adjustable with voltage selector
Power consumption	270W (AEP, UK, East European, CIS models) 300W (Other models)
Dimensions (w/h/d)	Approx. 288 × 205 × 375mm
Mass	Approx. 8.8kg
Supplied accessories:	AM loop antenna (1) Remote RM-SR77 (1) Size AA (R6) batteries (2) FM lead antenna (1) Speaker cords (5) Front speaker pads (8)

Design and specifications are subject to change without notice.

TABLE OF CONTENTS

1. GENERAL 4

2. DISASSEMBLY
- Sliding Panel Assembly 5

3. SERVICE MODE 6

4. ELECTRICAL ADJUSTMENT 11

5. DIAGRAMS
5-1. Circuit Boards Location 12
5-2. Block Diagrams
- Tuner Section (AEP, UK model) 13
- Tuner Section (East European, CIS model) 15
- Main Section 17
- Power Section 19

5-3. Schematic Diagram
–Tuner (AEP, UK model) Section – 23
5-4. Printed Wiring Board
–Tuner (AEP, UK model) Section – 25
5-5. Printed Wiring Board
–Tuner (East European, CIS model) Section – 26
5-6. Schematic Diagram
–Tuner (East European, CIS model) Section – 27
5-7. Printed Wiring Board – Main Section – 29
5-8. Schematic Diagram – Main (1/2) Section – 31
5-9. Schematic Diagram – Main (2/2) Section – 33
5-10. Schematic Diagram – AV/Mic Section – 35
5-11. Printed Wiring Board – AV/Mic Section – 36
5-12. Schematic Diagram – Power Amp Section – 37
5-13. Printed Wiring Board – Power Amp Section – 39
5-14. Schematic Diagram – Display Section – 41
5-15. Printed Wiring Board – Display Section – 43
5-16. Schematic Diagram – Sliding Panel Section – 45
5-17. Printed Wiring Board – Sliding Panel Section – 47
5-18. Schematic Diagram – Surround Section – 49
5-19. Printed Wiring Board – Surround Section – 51
5-20. Printed Wiring Board – Trans Section – 53
5-21. Schematic Diagram – Trans Section – 55
5-22. IC Block Diagrams 56
5-23. IC Pin Function 60

6. EXPLODED VIEWS
6-1. Case and Sliding Panel Section 63
6-2. Front Panel Section 64
6-3. Slide Mechanism Section 65
6-4. Circuit Boards and Back Panel Section 66

7. ELECTRICAL PARTS LIST 67

MODEL IDENTIFICATION
— BACK PANEL —

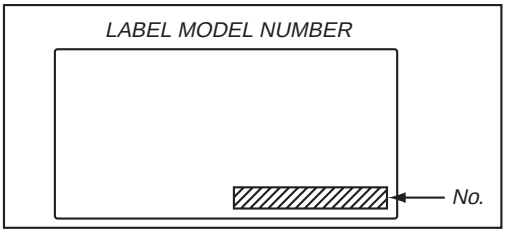

MODEL	PART No.
Saudi Arabia, Singapore, Malaysia	4-900-848-2☐
Thai, Australian	4-900-848-3☐
AEP, UK, East European, CIS	4-900-848-4☐

SAFETY-RELATED COMPONENT WARNING !!

COMPONENTS IDENTIFIED BY MARK ⚠ OR DOTTED LINE WITH MARK ⚠ ON THE SCHEMATIC DIAGRAMS AND IN THE PARTS LIST ARE CRITICAL TO SAFE OPERATION. REPLACE THESE COMPONENTS WITH SONY PARTS WHOSE PART NUMBERS APPEAR AS SHOWN IN THIS MANUAL OR IN SUPPLEMENTS PUBLISHED BY SONY.

SECTION 1
GENERAL

Front Panel

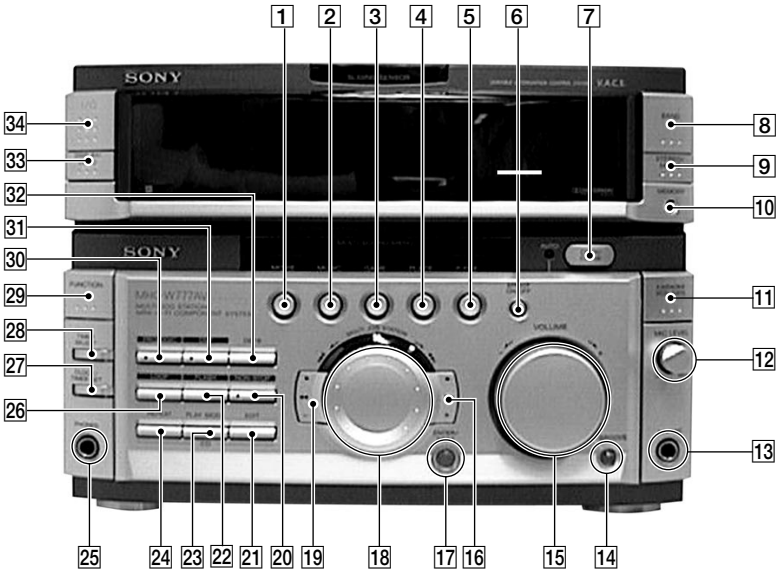

1 MOVIE button
2 MUSIC button
3 GAME button
4 PLACE button
5 P FILE button
6 EFFECT ON/OFF button
7 OPEN/CLOSE button
8 TUNER BAND button
9 STEREO/MONO button
10 MEMORY button
11 KARAOKE PON/MIX button
12 MIC LEVEL dial
13 MIX MIC jack
14 GROOVE button
15 VOLUME dial
16 ▶▶ + button
17 ENTER/NEXT button
18 MULTI JOG STATION dial
19 ◀◀ – button
20 NON-STOP button
21 EDIT button
22 FLASH button
23 PLAY MODE button
24 REPEAT button
25 PHONES jack
26 LOOP button
27 CLOCK/TIMER SET button
28 TIMER SELECT button
29 FUNCTION button
30 PROLOGIC button
31 DSP button
32 DBFB button
33 DISPLAY/DEMO button
34 I/⏻ (POWER) button

Rear Panel

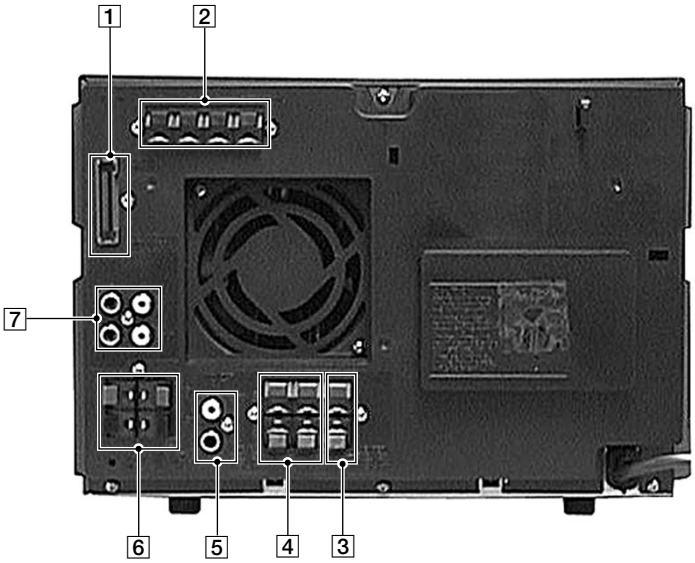

1 SYSTEM CONTROL jack
2 ANTENNA terminal
3 CENTER SPEAKER terminal
4 REAR SPEAKER terminal
5 MONITOR OUT jack
6 FRONT SPEAKER terminal
7 MD/VIDEO 1 jack

SECTION 2
DISASSEMBLY

Note: Follow the disassembly procedure in the numerical order given.

2-1. SLIDING PANEL ASSEMBLY

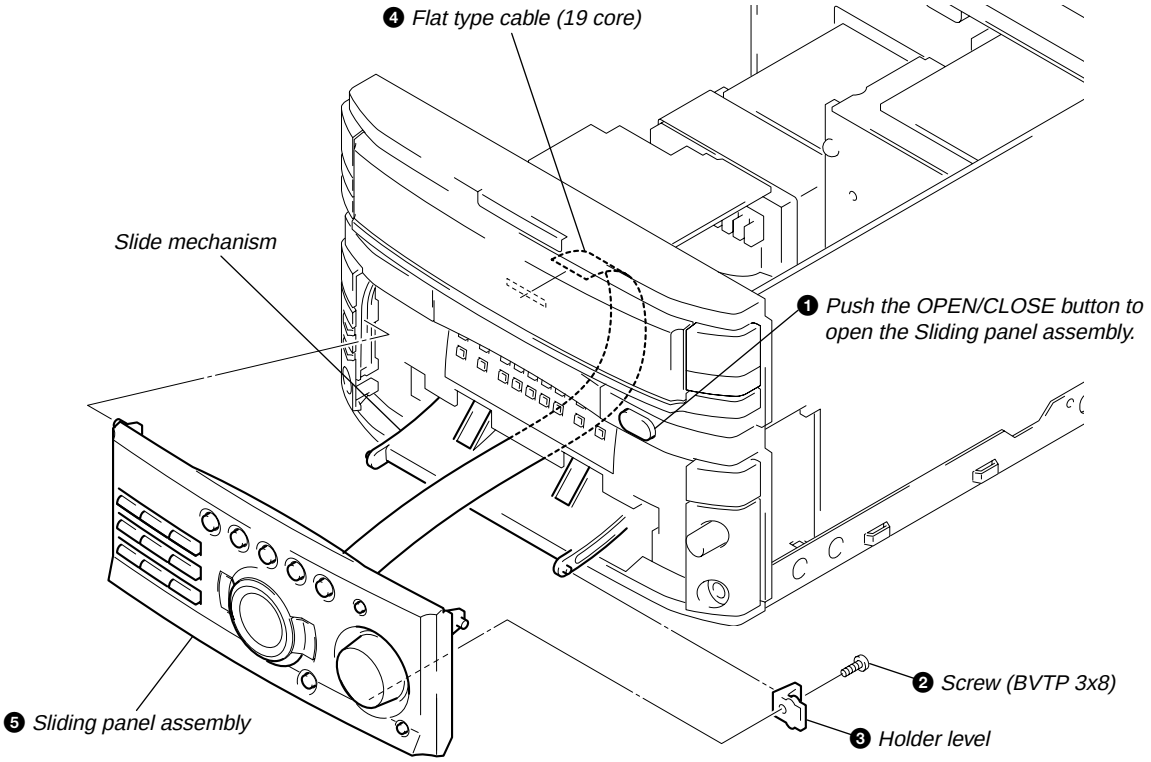

• **NOTE FOR INSTALLATION (LEVEL SLIDER)**

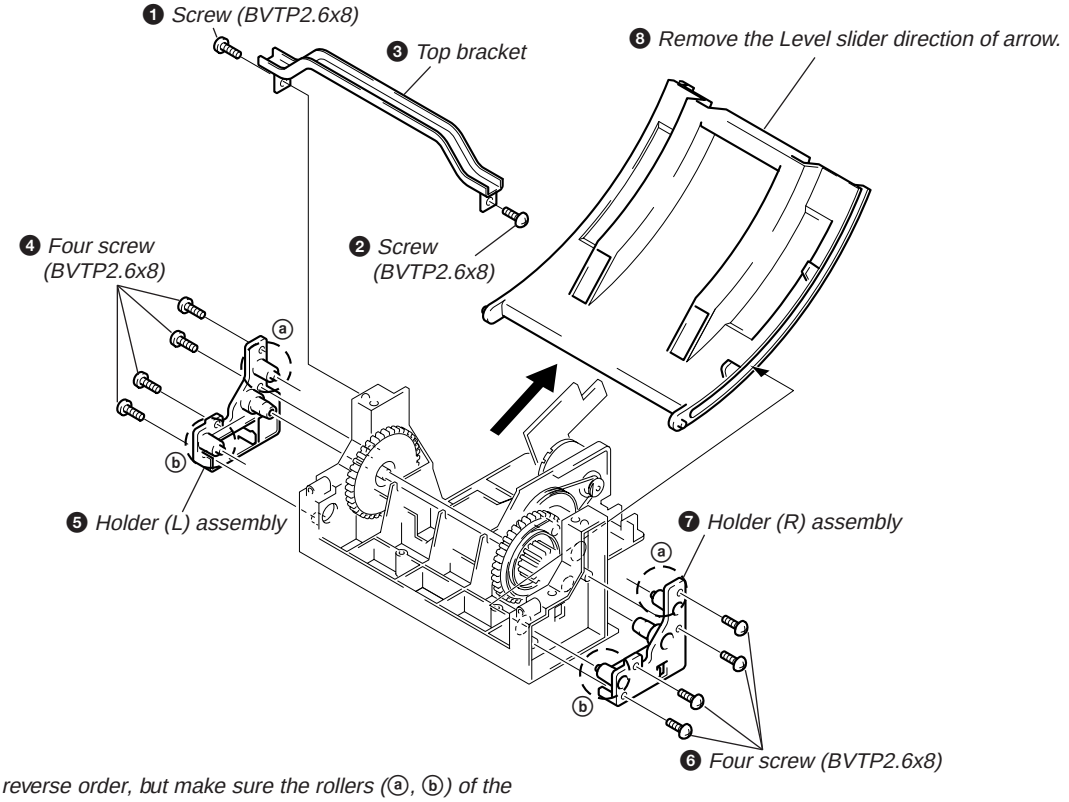

NOTE :
Attach in the reverse order, but make sure the rollers (ⓐ, ⓑ) of the holder (L) assembly and holder (R) assembly fit into the grooves of the level slider.

SECTION 3
SERVICE MODE

Connections and Operations When Used Alone

Normally, use the unit connected to the HTC-W555 as follows.
Basically, when servicing the unit, connect the unit as follows.

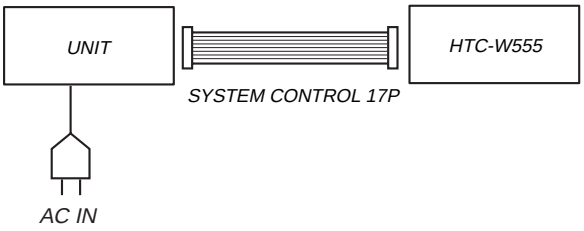

Even when not connected to the HTC-W555, the unit can operate alone as it mounts a power supply (some functions will however not be available).

MC Cold Reset

- The cold reset clears all data including preset data stored in the RAM to initial conditions. Execute this mode when returning the set to the customer.

Procedure:

1. Press three buttons EDIT , ENTER/NEXT , and DISPLAY/DEMO simultaneously.
2. The fluorescent indicator tube becomes blink instantaneously, and the set is reset.

CD Delivery Mode (This mode can be used only when the HTC-W555 is connected.)

- This mode moves the pick-up to the position durable to vibration. Use this mode when returning the set to the customer after repair.

Procedure:

1. Press I/⏻ button to turn the set ON.
2. Press LOOP button and I/⏻ button simultaneously.
3. A message “LOCK” is displayed on the fluorescent indicator tube, and the CD delivery mode is set.

MC Hot Reset

- This mode resets the set with the preset data kept stored in the memory. The hot reset mode functions same as if the power cord is plugged in and out.

Procedure:

1. Press three buttons REPEAT , ENTER/NEXT , and DISPLAY/DEMO simultaneously.
2. The fluorescent indicator tube becomes blink instantaneously, and the set is reset.

Sled Servo Mode (This mode can be used only when the HTC-W555 is connected.)

- This mode can run the CD sled motor freely. Use this mode, for instance, when cleaning the pick-up.

Procedure:

1. Select the function “CD”.
2. Press three buttons FLASH , ENTER/NEXT , and KARAOKE PON/MIX simultaneously.
3. The Sled Servo mode is selected, if “CD” is blinking on the fluorescent indicator tube.
4. With the CD in stop status, press ▶▶ + button move the pick-up to outside track, or – ◀◀ button to inside track.
5. To exit from this mode, perform as follows:
   1) Move the pick-up to the most inside track.
   2) Press three buttons in the same manner as step 2.

Note:

- Always move the pick-up to most inside track when exiting from this mode. Otherwise, a disc will not be unloaded.
- Do not run the sled motor excessively, otherwise the gear can be chipped.

Change-over of FUNCTION Name

- The FUNCTION name of external input terminal can be changed over to VIDEO 1 or MD. With the FUNCTION selected to “MD”, about 5dB mute is applied to the input gain.

Procedure:

1. Press I/⏻ button to turn the set OFF.
2. Press I/⏻ button together with FUNCTION button, and the power is turned on, the display of fluorescent indicator tube changes to “MD” or “VIDEO 1” instantaneously, and thus the FUNCTION is changed over.

Change-over of AM Tuner Step between 9kHz and 10kHz

- A step of AM channels can be changed over between 9kHz and 10kHz.

Procedure:

1. Press I/⏻ button to turn the set ON.
2. Select the function “TUNER”, and press TUNER/BAND button to select the BAND “MW”.
3. Press I/⏻ button to turn the set OFF.
4. Press ENTER/NEXT and I/⏻ buttons simultaneously, and the display of fluorescent indicator tube changes to “MW step 10” or “MW step 9”, and thus the channel step is changed over.

LED and Fluorescent Indicator Tube All Lit, Key Check Mode (Do not connect the HTC-W555.)

Procedure:

1. Press I/⏻ button to turn the set ON.
2. Press the OPEN/CLOSE button to open the sliding panel.
3. Press three buttons DELAY , ENTER/NEXT , and DISPLAY/DEMO simultaneously.
4. LEDs and fluorescent indicator tube are all turned on. Each time the MOVIE button is pressed, the fluorescent indicator tube lights up as follows:
   lights up completely → lights up partially 1 → lights up partially 2 → lights up completely.
5. Press GAME button, and the key check mode is activated.
6. In the key check mode, the fluorescent indicator tube displays "K @@ V0 J0". Each time a button is pressed, "K"value decreases. However, once a button is pressed, it is no longer taken into account. (@@ means the total of buttons)
   "J" Value increases like 1, 2, 3 ... if rotating JOG knob in "+" direction, or it decreases like 0, 9, 8 ... if rotating in "-" direction.
   "V" Value increases like 1, 2, 3 ... if rotating VOLUME knob in "+" direction, or it decreases like 0, 9, 8 ... if rotating in "-" direction.
7. Pressing all buttons lights up the fluorescent indicator tube completely.
8. To exit from this mode, press three buttons EDIT , ENTER/NEXT and DISPLAY/DEMO simultaneously. (COLD RESET)
9. To exit from this mode, press three buttons in the same manner as step 1, or disconnect the power cord.

CD, TAPE Deck Aging Mode (This mode can be used only when the HTC-W555 is connected.)

This mode can be used for checking the operations of the CD player and tape deck.

- When problems occur;
  Aging stops, and the stopped state is displayed on the fluorescent indicator tube.
- When no problems;
  Aging continues.

Preparations:

- Set the CD on the DISC1 tray.
- Insert a commercially available tape for recording (tapes which contents can be erased, etc.) in decks A and B.

Setting the aging mode:

Press the PLAY MODE button, ENTER/NEXT button, and STEREO/MONO button together.
When the aging mode is set, the CD roulette mark blinks. To exit the mode, press the I/⏻ button and turn OFF the power.

Sequence:

The aging mode is executed in the following sequence.
If the function is set to "CD" when the aging mode is set, aging is performed starting from the CD player. When set to "TAPE A" or "TAPE B", aging is started from deck A.
If the function is set to others, aging will not be started until the function is switched to CD or TAPE.

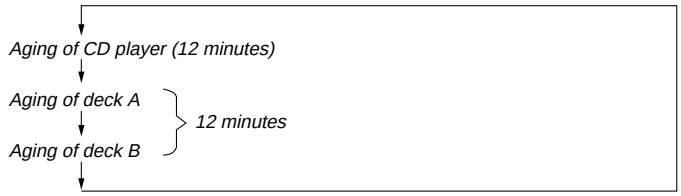

Display of status:

- The aging status is displayed on the fluorescent indicator tube.
- Normally, the CD player displays the remaining aging time. But if operations ended abnormally, it displays the cause.
- During the aging of the tape deck, the operations performed will be displayed. If operations ended abnormally, this will be displayed at the fluorescent display tube.

CD Player

- During normal operations:
  Display of fluorescent indicator tube

  **1-@@

**: Displays "CD" and the remaining aging time (minutes) alternately. The remaining aging time is counted down from 12.

@@: Track number being accessed.

• When operations end abnormally:

Display of fluorescent display tube

Display	Main Cause
NO DISC ERR	DISC 1 is NO DISC from the beginning
FOCUS1 ERR	Focus is not imposed properly
FOCUS2 ERR	The focus deviated several times after the disc rotated normally
GFS ERR	GFS ERROR
FBIAS ERR	Error during focus bias adjustment
SENSOR ERR	DISC 1 was found to be NO DISC by the disc sensor
TABLE ERR	The table did not rotate normally
TRAY ERR	The tray containing the BD did not operate normally

Tape Deck

Display of Operations	Operation	Timing of Ending
TAPE A AG-1	TAPE A REW	Shutoff
TAPE A AG-2	TAPE A FWD	2 minute playback
TAPE A AG-3	TAPE A FF	20 seconds or shutoff
TAPE A AG-4	TAPE A REV	2 minutes playback
TAPE A AG-5	TAPE A REW	Shutoff
TAPE B AG-1	TAPE B REW	Shutoff
TAPE B AG-2	TAPE B FWD	2 minute playback
TAPE B AG-3	TAPE B FF	20 seconds or shutoff
TAPE B AG-4	TAPE B REV	2 minute playback
TAPE B AG-5	TAPE B REW	Shutoff

Operations during aging

• Operations are performed in the following sequence during aging.

<CD player>

1. The CD tray rotates and disc 1 is selected.
2. Chucking is performed.
3. TOC is read.
4. Track 1 played back for 2 seconds.
5. The last track is played back for 2 seconds.
6. 1 to 5 is repeated.
7. After 12 minutes of aging, aging is switched to the tape deck.

<Tape Deck>

1. The tape in deck A is rewound to the head.
2. The FWD side is played back for 2 minutes.
3. The tape is fast forwarded (FF) for 20 seconds. The following procedure is performed when the tape end is reached before the 20 seconds.
4. The REV side is played back for 2 minutes.
5. The tape is rewound to the head (REW).
6. The tape in deck B is rewound to the head.
7. The FWD side is played back for 2 minutes.
8. The tape is fast forwarded (FF) for 20 seconds. The following procedure is performed when the tape end is reached before the 20 seconds.
9. The REV side is played back for 2 minutes.
10. The tape is rewound to the head (REW).
11. Aging is switched to the CD player.

PANEL Aging Mode

This mode is used for opening and closing the sliding panel continuously.

Setting the aging mode :

With the set at standby condition, press FLASH button, ENTER/NEXT button and STEREO/MONO button together. The aging will start and sliding panel will follow aging sequence as described below.

- When problems occur ;
  Aging stops and “AGING ERROR” is displayed on the fluorescent indicator tube.

- When no problems;
  Aging is carried out repeatedly. After 65000 times, “AGING STOP” is displayed and aging stops.

Aging Sequence

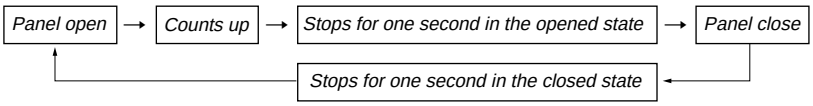

Each time the DISPLAY/DEMO button is pressed, the display switches as follows.

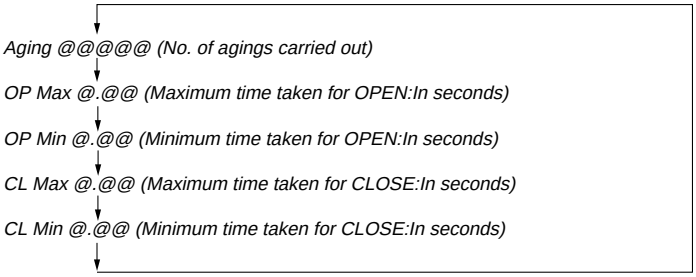

SECTION 4
ELECTRICAL ADJUSTMENT

TUNER SECTION | **0dB=1μV**

Note 1: As a front-end (FE1) is difficult to repair if faulty, replace it with new one.
Note 2: No adjustment is needed for a tuner pack except for AEP, UK, East European, CIS models.

AM Tuned Level Adjustment (AEP, UK, East European, CIS model)

Note: FM Tuned Level Adjustment should be performed after this AM Tuned Level Adjustment.

Setting:
Band: MW

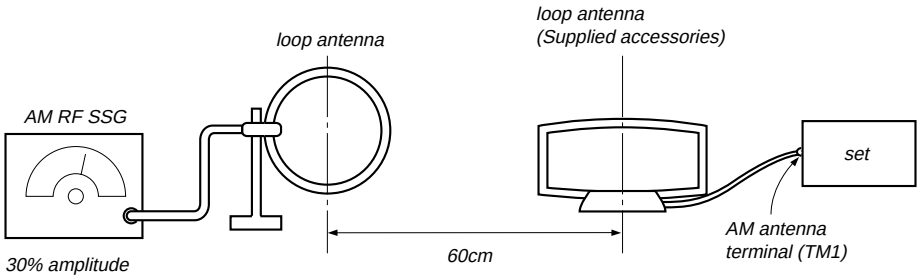

30% amplitude modulation by 400Hz signal

Field strength dB (μV/m) = SSG output level dB (μV/m) –26dB.

Modulation: 999 kHz (at 9 kHz step)
1,050 kHz (at 10 kHz step)

Procedure:
1. Set the output of SSG so that the input level of the set becomes 55 dB.
2. Tune the set to 999 kHz or 1,050 kHz.
3. Adjust RV41 to the point (moment) when the TUNED indicator will change from going off to going on.

Adjustment Location: TCB board

FM Tuned Level Adjustment (AEP, UK, East European, CIS model)

Note: This adjustment should be performed after the AM Tuned Level Adjustment.

Setting:
Band: FM

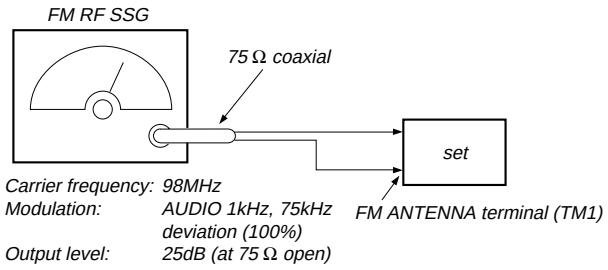

Carrier frequency: 98MHz
Modulation: AUDIO 1kHz, 75kHz deviation (100%)
Output level: 25dB (at 75 Ω open)

Procedure:
1. Supply a 25 dB 98 MHz signal from the ANTENNA terminal.
2. Tune the set to 98 MHz.
3. Adjust RV42 to the point (moment) when the TUNED indicator will change from going off to going on.

Adjustment Location: TCB board

Adjustment Location
[TCB BOARD] (Component Side)

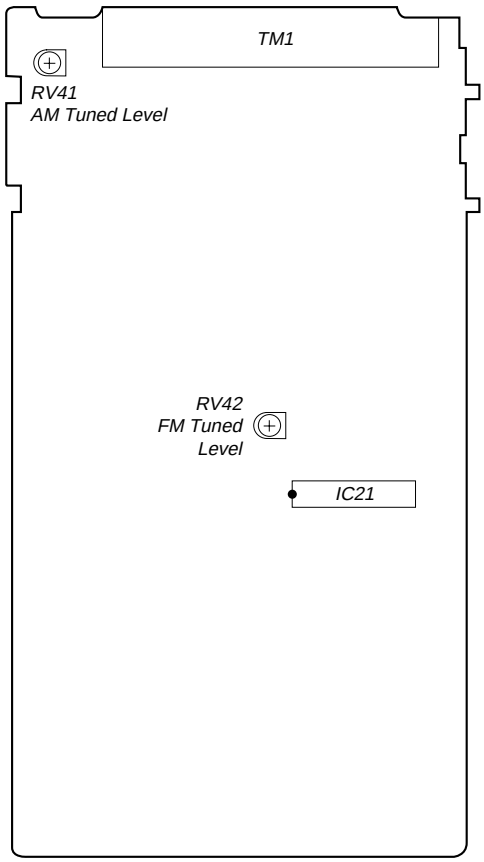

FM Polar Adjustment (East European, CIS model)

Connection 1 :

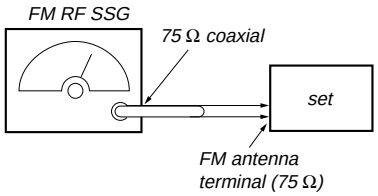

Carrier frequency: 69 MHz
Output level: 1 mV (60 dBμ) (at 75 Ω open)
Modulation: AUDIO 1 kHz, 10 kHz deviation

Connection 2 :

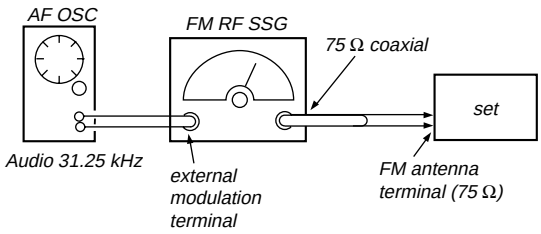

Carrier frequency: 69 MHz
Output level: 1 mV (60 dBμ) (at 75 Ω open)
Modulation: AUDIO 31.25 kHz, 10 kHz deviation (EXTERNAL MODULATION)

Procedure :

1. Set the modulation of FM RF SSG to AUDIO 1 kHz, 10 kHz deviation according to “Connection 1”.
2. Tune the set to 69 MHz.
3. Adjust the RV1702 so that the reading of frequency counter connected to TP1702 (VCO) becomes within 31.25 kHz ± 0.05 kHz. (VCO adjustment)
4. Then record the reading of the level meter connected to TP1701.
5. Set the modulation of FM RF SSG to AUDIO 31.25 kHz, 10 kHz deviation according to “Connection 2”.
6. Tune the set to 69 MHz.
7. Set the CT1701 to be mechanical center.
8. Adjust the L1701 so that the reading of the level meter connected to TP1701 (FILTER) becomes maximum.
   Then adjust the CT1701 so that the reading of the level meter connected to TP1701 (FILTER) becomes maximum. (SUB CARRIER PEAK Adjustment)
9. Adjust the RV1701 so that the level at the moment becomes 14 dB higher value than the level recorded in step 4. (SUB CARRIER LEVEL Adjustment)

Adjustment Location: TCB board

Adjustment Location:

[TCB BOARD] (Conductor Side)

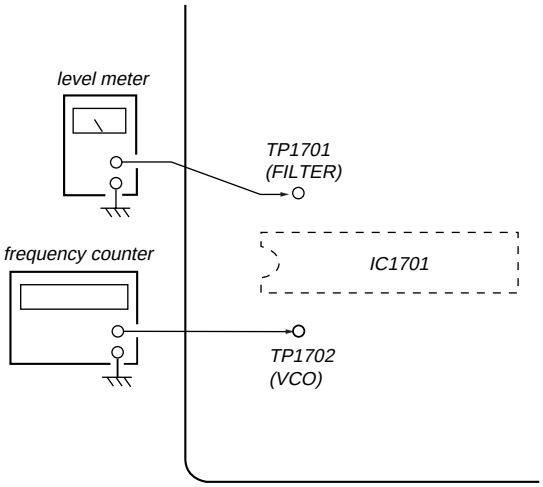

[TCB BOARD] (Component Side)

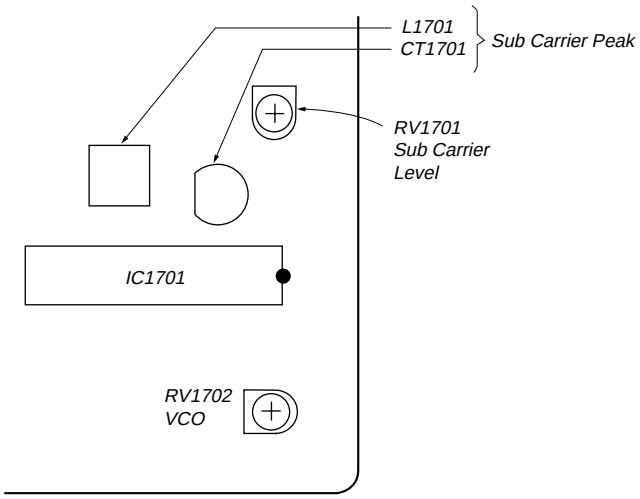

SECTION 5
DIAGRAMS

5-1. CIRCUIT BOARDS LOCATION

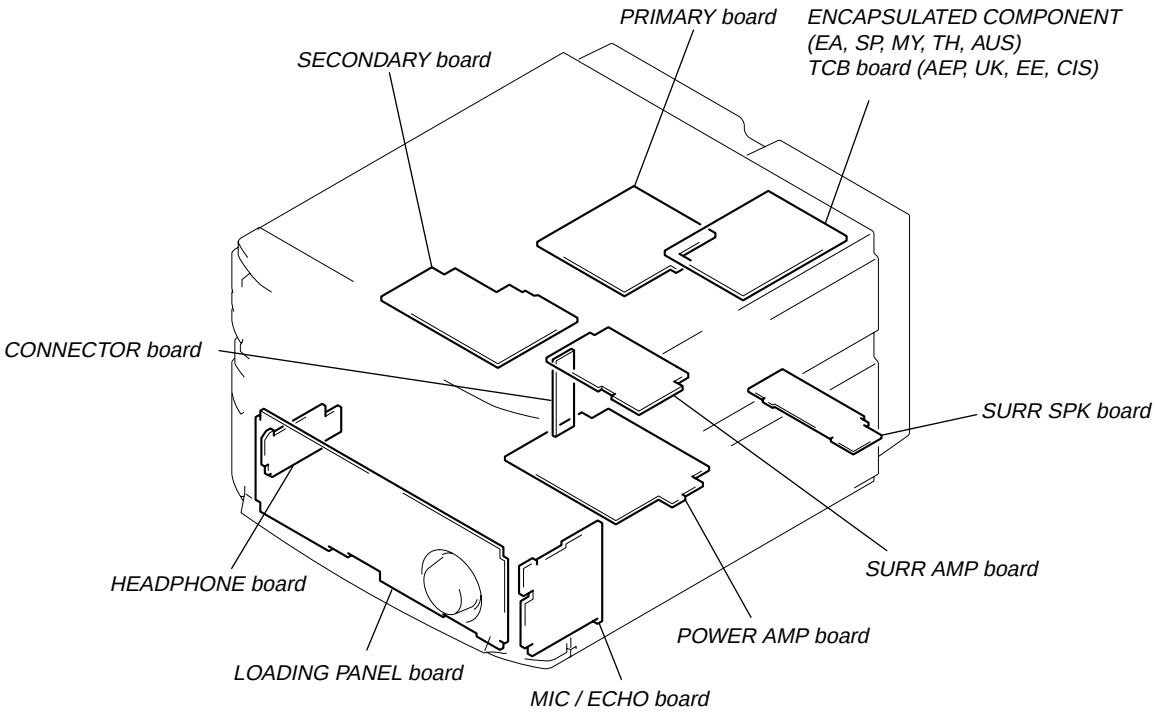

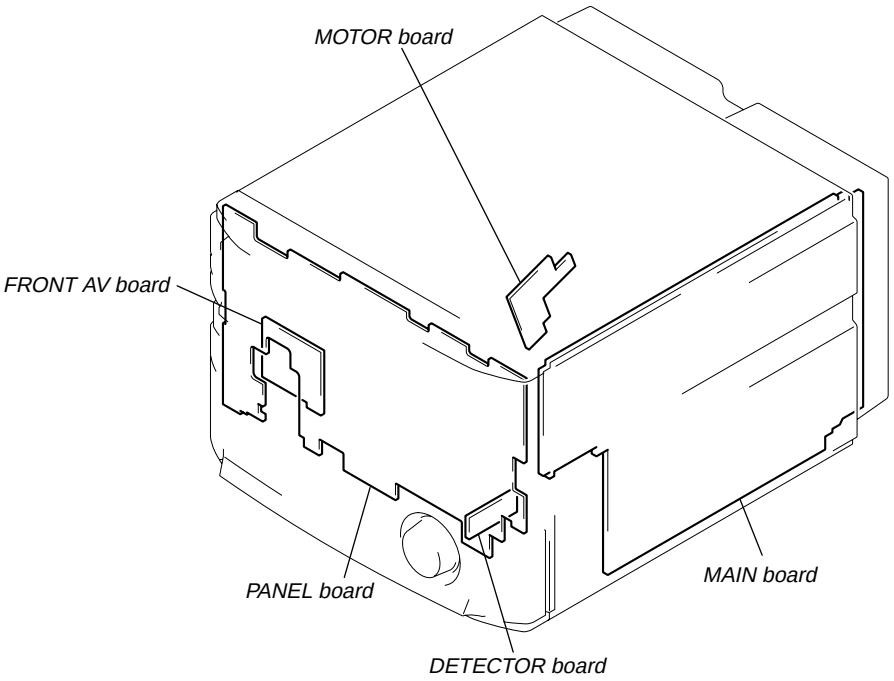

- Abbreviation
  EE : East European
  EA : Saudi Arabia
  SP : Singapore
  MY : Malaysia
  AUS : Australian
  TH : Thai

5-2. BLOCK DIAGRAM – TUNER SECTION – (AEP, UK model)

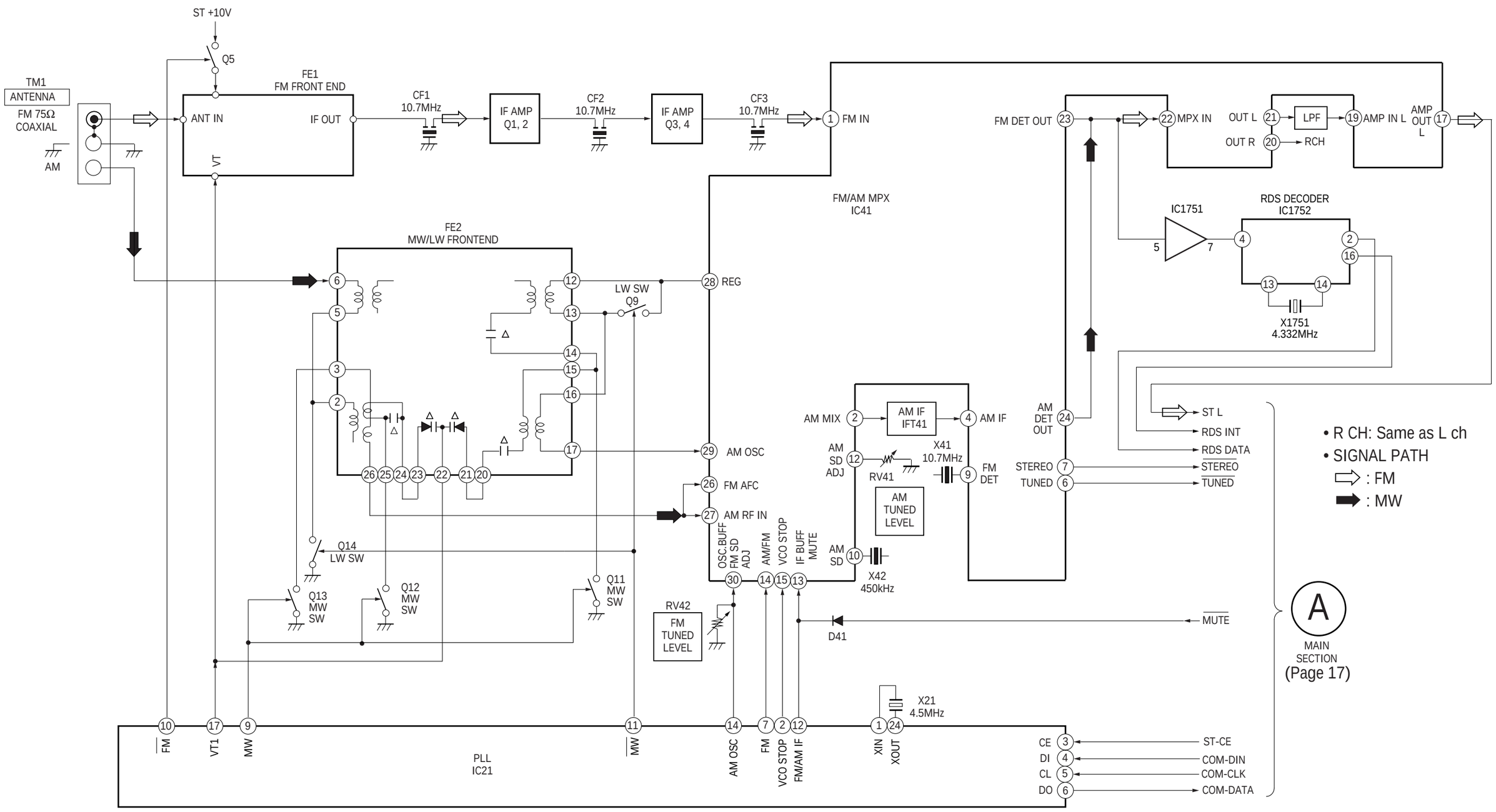

16

– TUNER SECTION – (East European, CIS model)

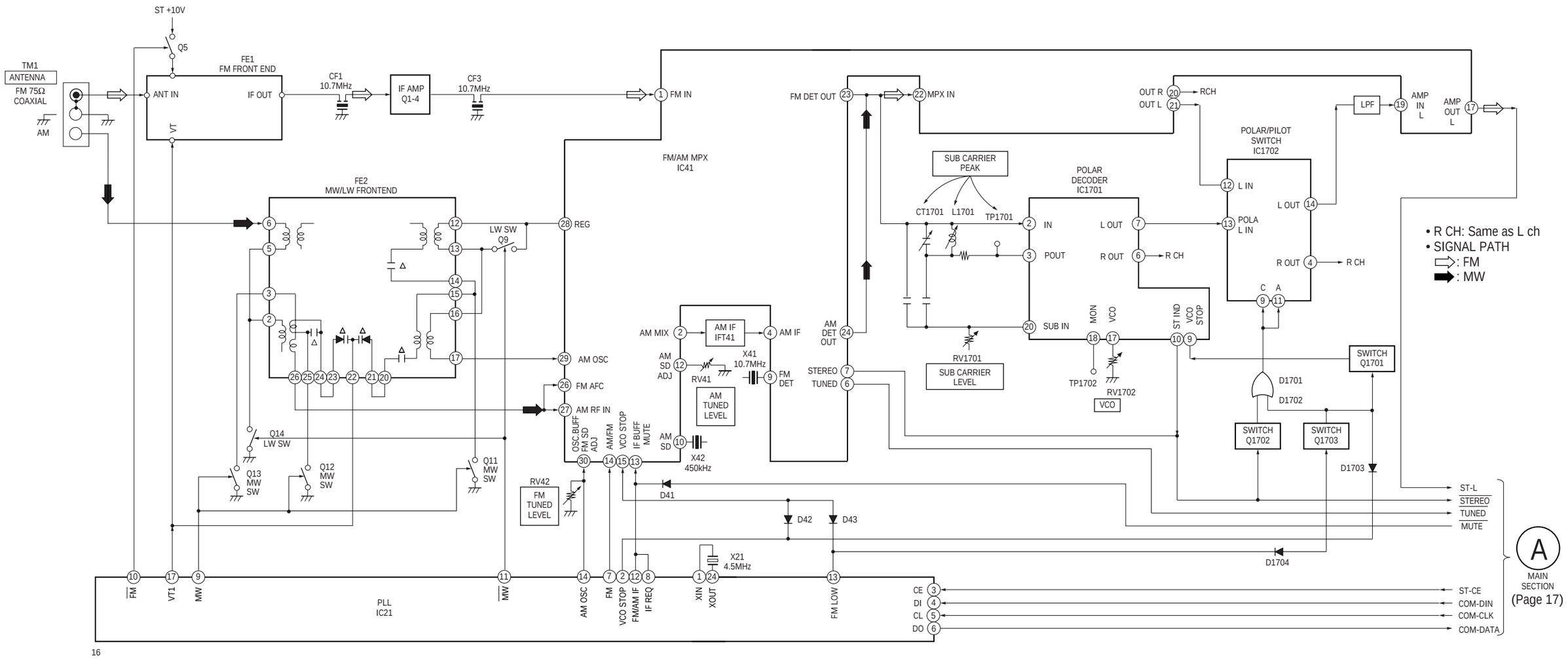

– MAIN SECTION –

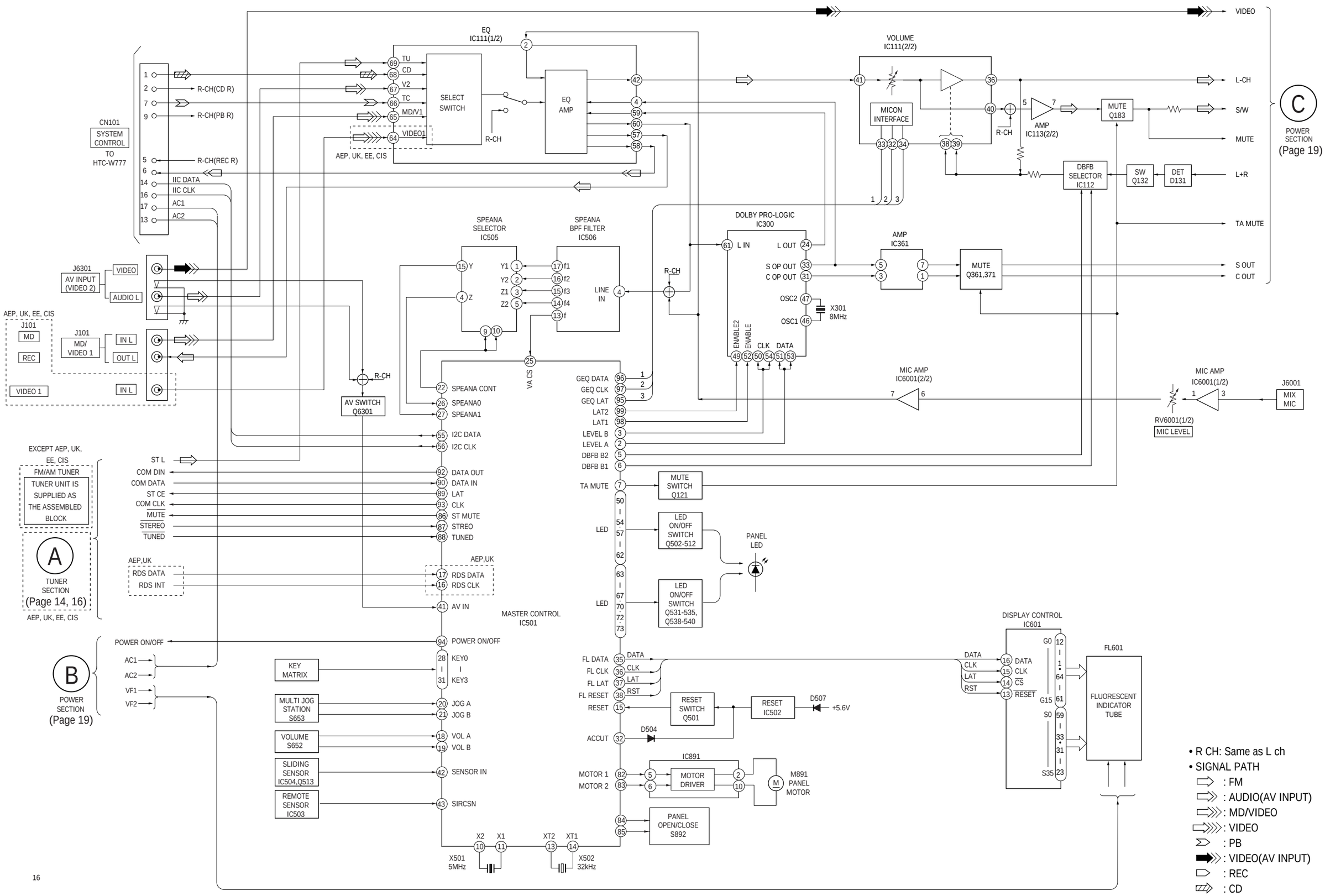

– POWER SECTION –

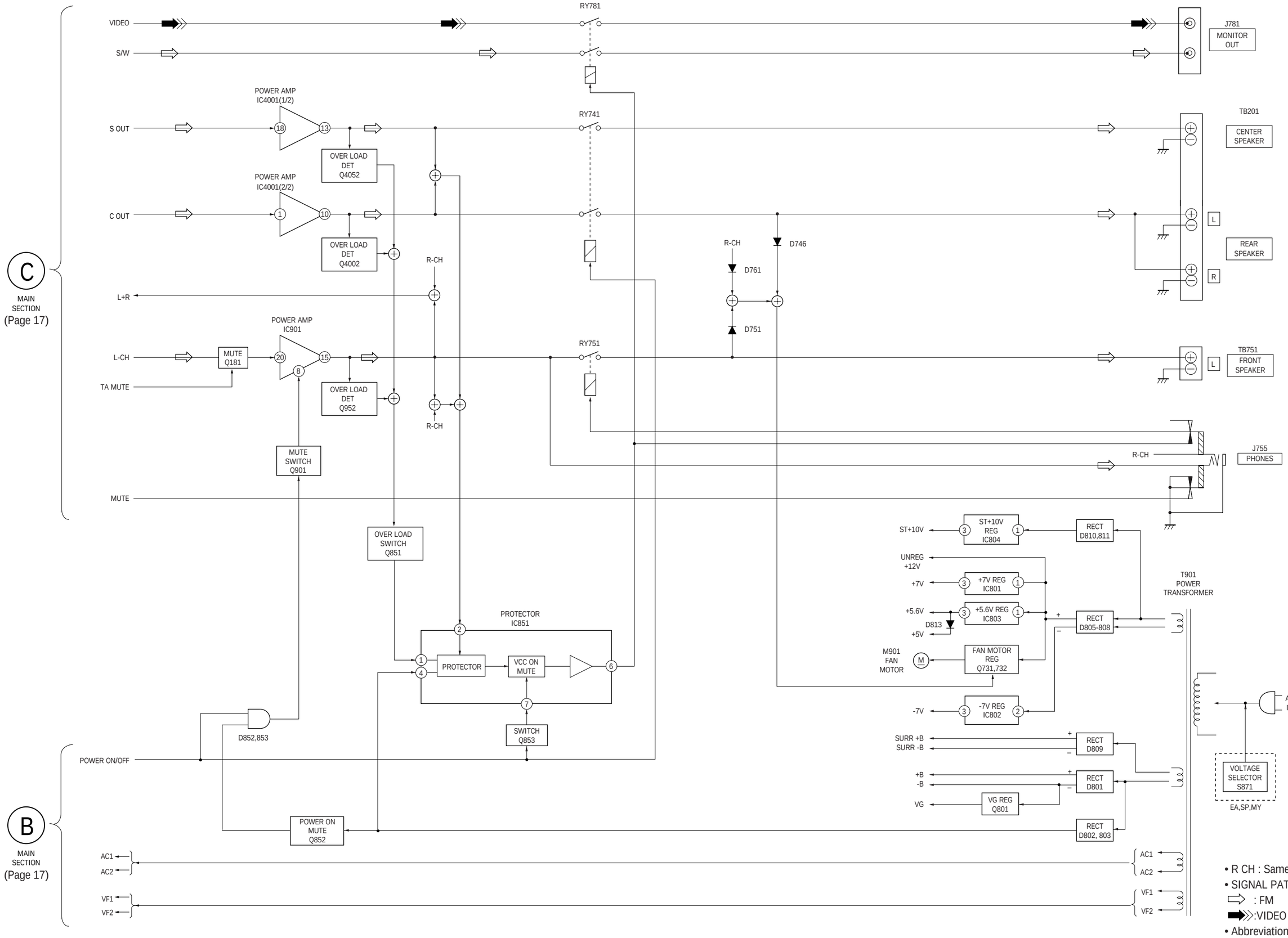

- R CH : Same as L ch
- SIGNAL PATH
  - ⇨ : FM
  - ➡ :VIDEO (AV INPUT)
- Abbreviation
  - EA : Saudi Arabia model.
  - SP : Singapore model.
  - MY : Malaysia model.

THIS NOTE IS COMMON FOR PRINTED WIRING BOARDS AND SCHEMATIC DIAGRAMS.
(In addition to this, the necessary note is printed in each block.)

For schematic diagrams.

Note:

- All capacitors are in µF unless otherwise noted. pF: µµF 50 WV or less are not indicated except for electrolytics and tantalums.
- All resistors are in Ω and 1/4 W or less unless otherwise specified.
- △ : internal component.
- : nonflammable resistor.
- : fusible resistor.
- : panel designation.

Note: The components identified by mark ⚠ or dotted line with mark ⚠ are critical for safety.
Replace only with part number specified.

- B + : B+ Line.
- B − : B– Line.
- : adjustment for repair.
- Voltages and waveforms are dc with respect to ground under no-signal (detuned) conditions.
- Voltages are taken with a VOM (Input impedance 10 MΩ). Voltage variations may be noted due to normal production tolerances.
- Waveforms are taken with a oscilloscope. Voltage variations may be noted due to normal production tolerances.
- Circled numbers refer to waveforms.
- Signal path.
  - : FM
  - : AM
  - : AUDIO (AV INPUT)
  - : MD/VIDEO
  - : VIDEO (AV INPUT)
  - : PB (DECK A)
  - : REC (DECK B)
  - : CD
- Abbreviation
  - EE : East European model.
  - EA : Saudi Arabia model.
  - SP : Singapore model.
  - MY : Malaysia model.
  - AUS : Australian model.
  - TH : Thai model.

For printed wiring boards.

Note:

- : parts extracted from the component side.
- : parts extracted from the conductor side.
- ■ : parts mounted on the conductor side.
- ○ : Through hole.
- △ : internal component.
- : Pattern from the side which enables seeing.

• Indication of transistor

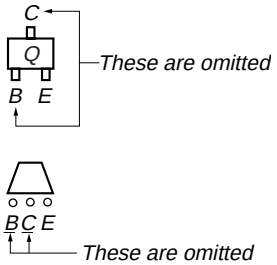

Waveforms

– TUNER SECTION –
(AEP, UK model)

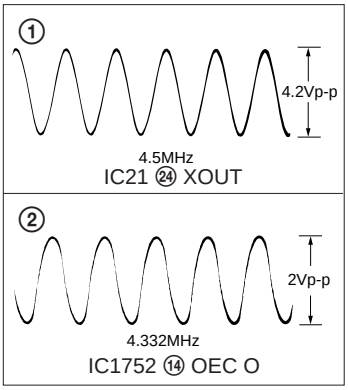

– Tuner Section –
(East European, CIS model)

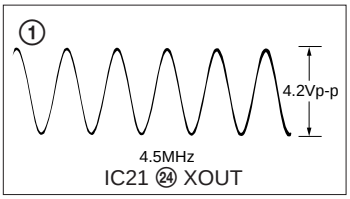

– DISPLAY Section –

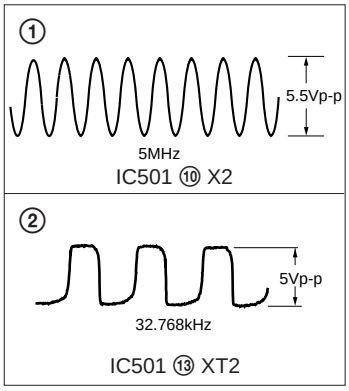

5-3. SCHEMATIC DIAGRAM – TUNER SECTION – (AEP, UK model)

• Refer to page 22 for Waveforms.
• Refer to page 56 for IC Block Diagrams.

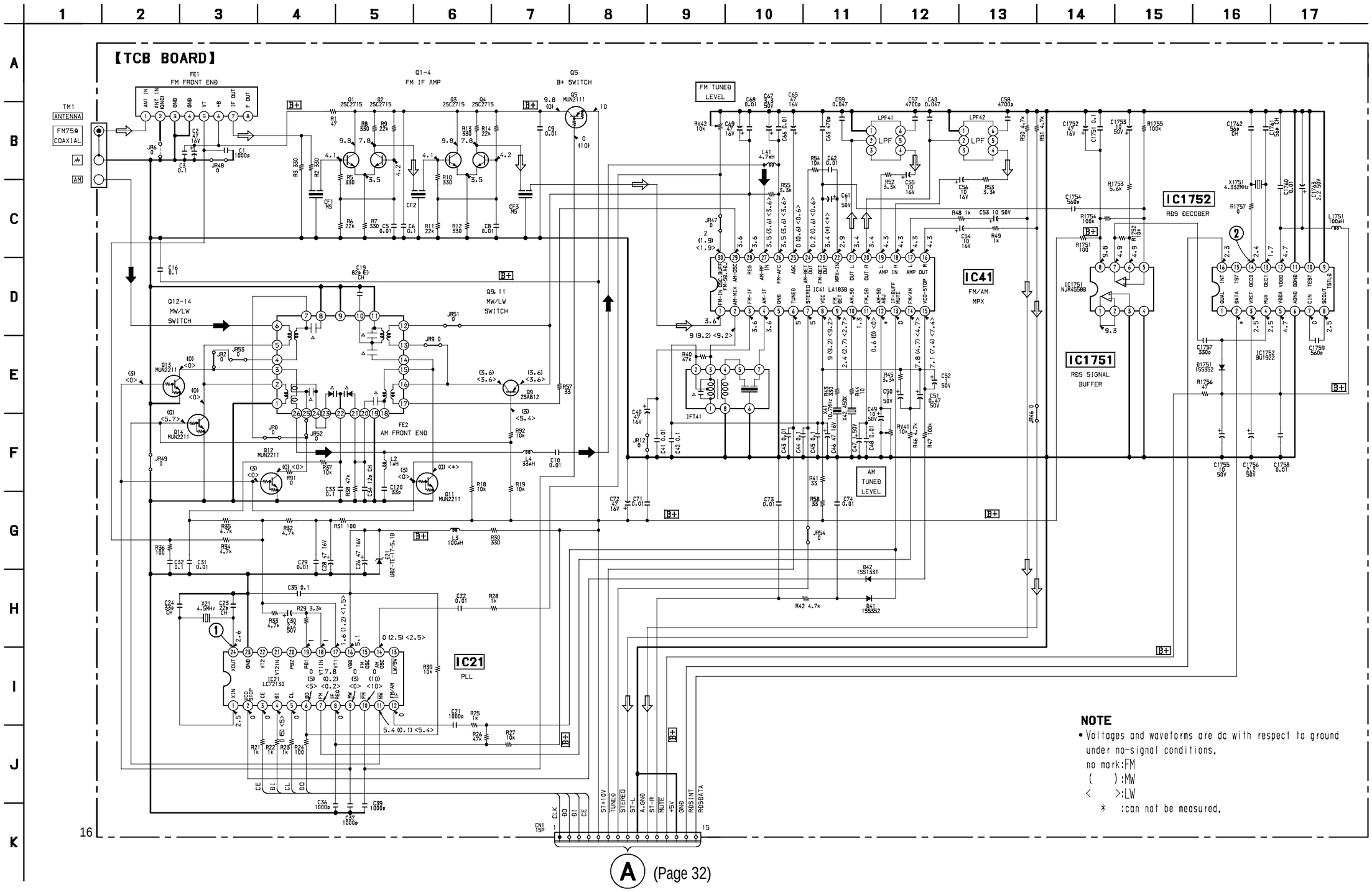

5-4. Printed Wiring Board – Tuner Section – (AEP, UK model)

• Refer to page 12 for Circuit Boards Location.

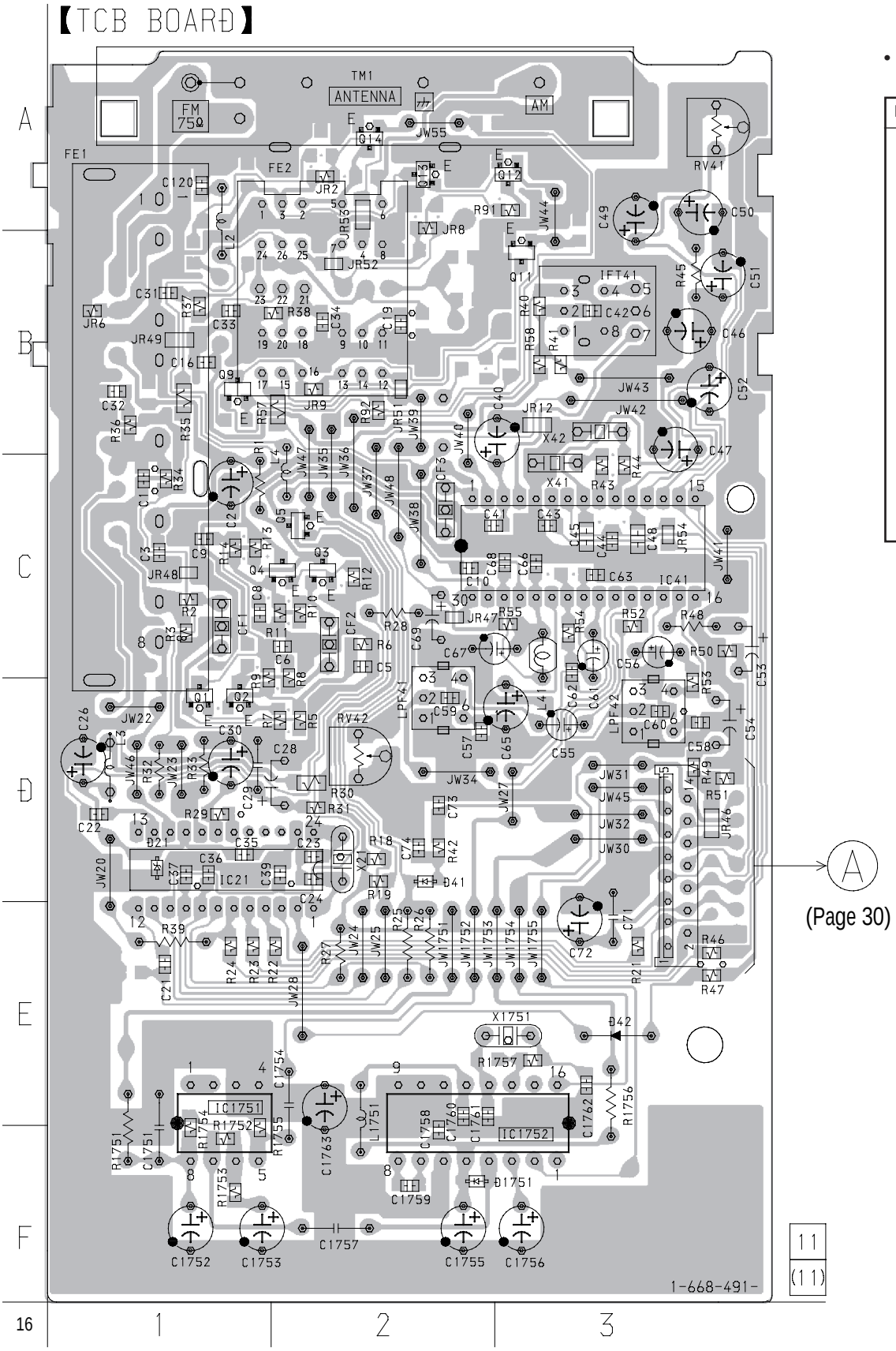

• **Semiconductor Location**

Ref. No.	Location
D21	D-1
D41	D-2
D42	E-3
D1751	F-2
IC21	D-1
IC41	C-3
IC1751	E-1
IC1752	F-3
Q1	D-1
Q2	D-1
Q3	C-2
Q4	C-2
Q5	C-2
Q9	B-1
Q11	B-3
Q12	A-3
Q13	A-2
Q14	A-2

5-5. Printed Wiring Board – Tuner Section – (East European, CIS model)

• Refer to page 12 for IC Block Diagrams.

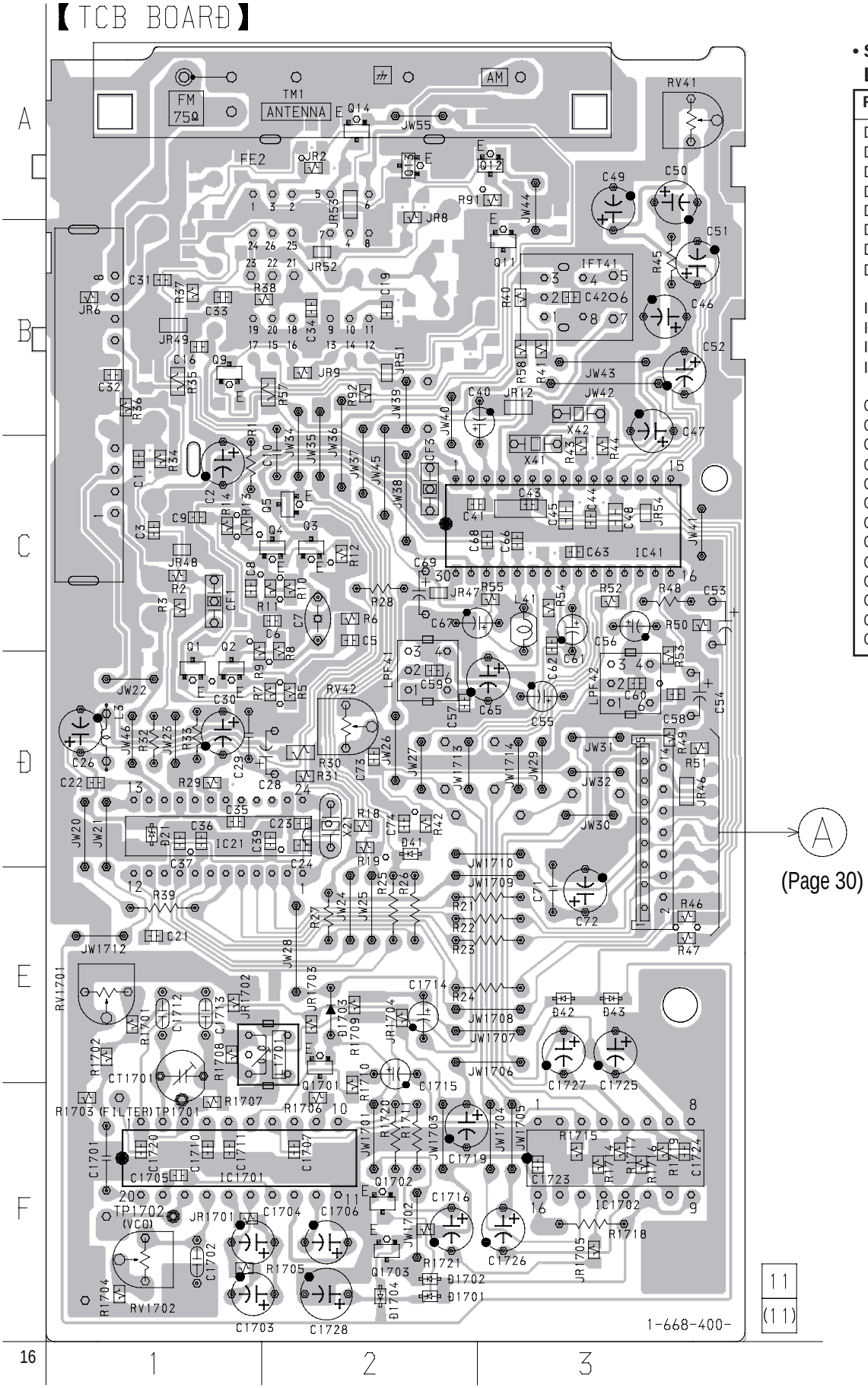

• **Semiconductor Location**

Ref. No.	Location
D21	D-1
D41	D-2
D42	E-3
D43	E-3
D1701	F-2
D1702	F-2
D1703	E-2
D1704	F-2
IC21	D-1
IC41	C-3
IC1701	F-1
IC1702	F-3
Q1	D-1
Q2	D-2
Q3	C-2
Q4	C-2
Q5	C-2
Q9	B-1
Q11	B-3
Q12	A-3
Q13	A-2
Q14	A-2
Q1701	E-2
Q1702	F-2
Q1703	F-2

5-6. SCHEMATIC DIAGRAM – TUNER SECTION – (East European, CIS model)

- Refer to page 14 for Waveforms.
- Refer to page 56 for IC Block Diagrams.

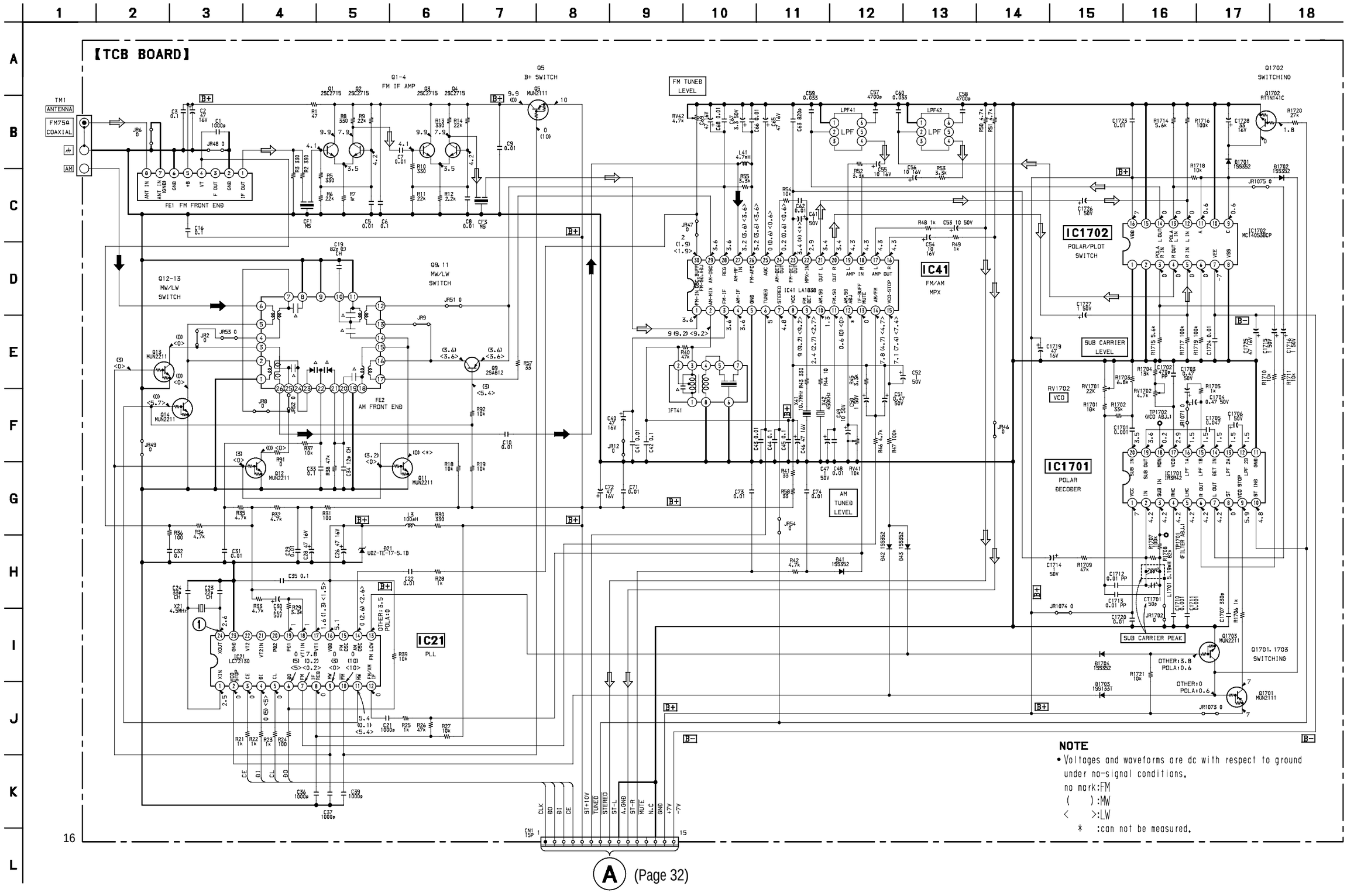

5-7. PRINTED WIRING BOARD – MAIN SECTION –

• Refer to page 12 for Circuit Boards Location.

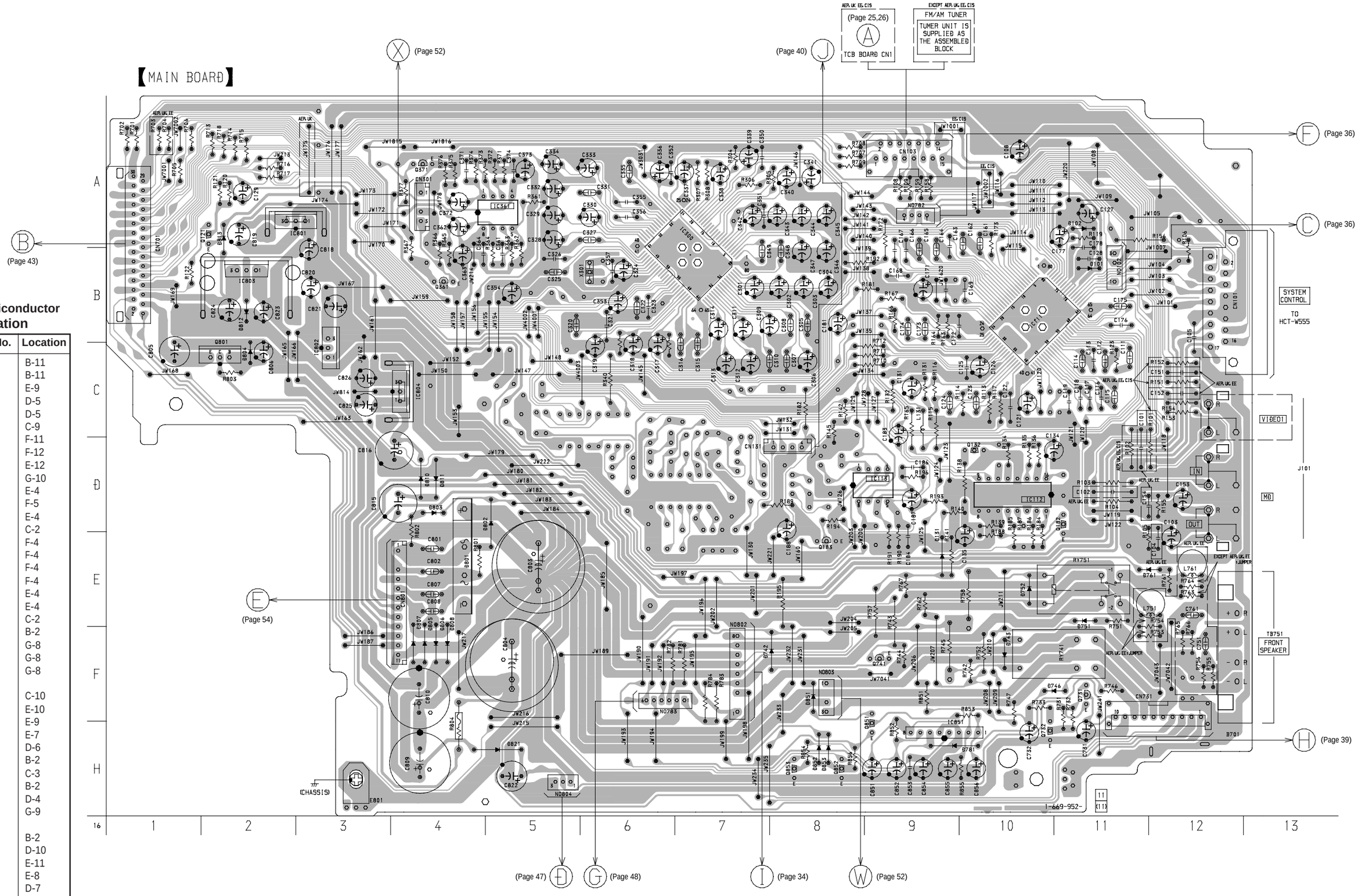

• **Semiconductor Location**

Ref. No.	Location
D101	B-11
D102	B-11
D131	E-9
D401	D-5
D402	D-5
D403	C-9
D751	F-11
D752	F-12
D761	E-12
D781	G-10
D801	E-4
D802	F-5
D803	E-4
D804	C-2
D805	F-4
D806	F-4
D807	F-4
D808	F-4
D810	E-4
D811	E-4
D812	C-2
D813	B-2
D851	G-8
D852	G-8
D853	G-8
IC111	C-10
IC112	E-10
IC113	E-9
IC401	E-7
IC402	D-6
IC801	B-2
IC802	C-3
IC803	B-2
IC804	D-4
IC851	G-9
Q121	B-2
Q132	D-10
Q182	E-11
Q183	E-8
Q401	D-7
Q731	G-11
Q732	G-10
Q801	C-2
Q851	G-9
Q852	H-8
Q853	H-8

5-8. SCHEMATIC DIAGRAM – MAIN (1/2) SECTION –

• Refer to page 58 for IC Block Diagrams.

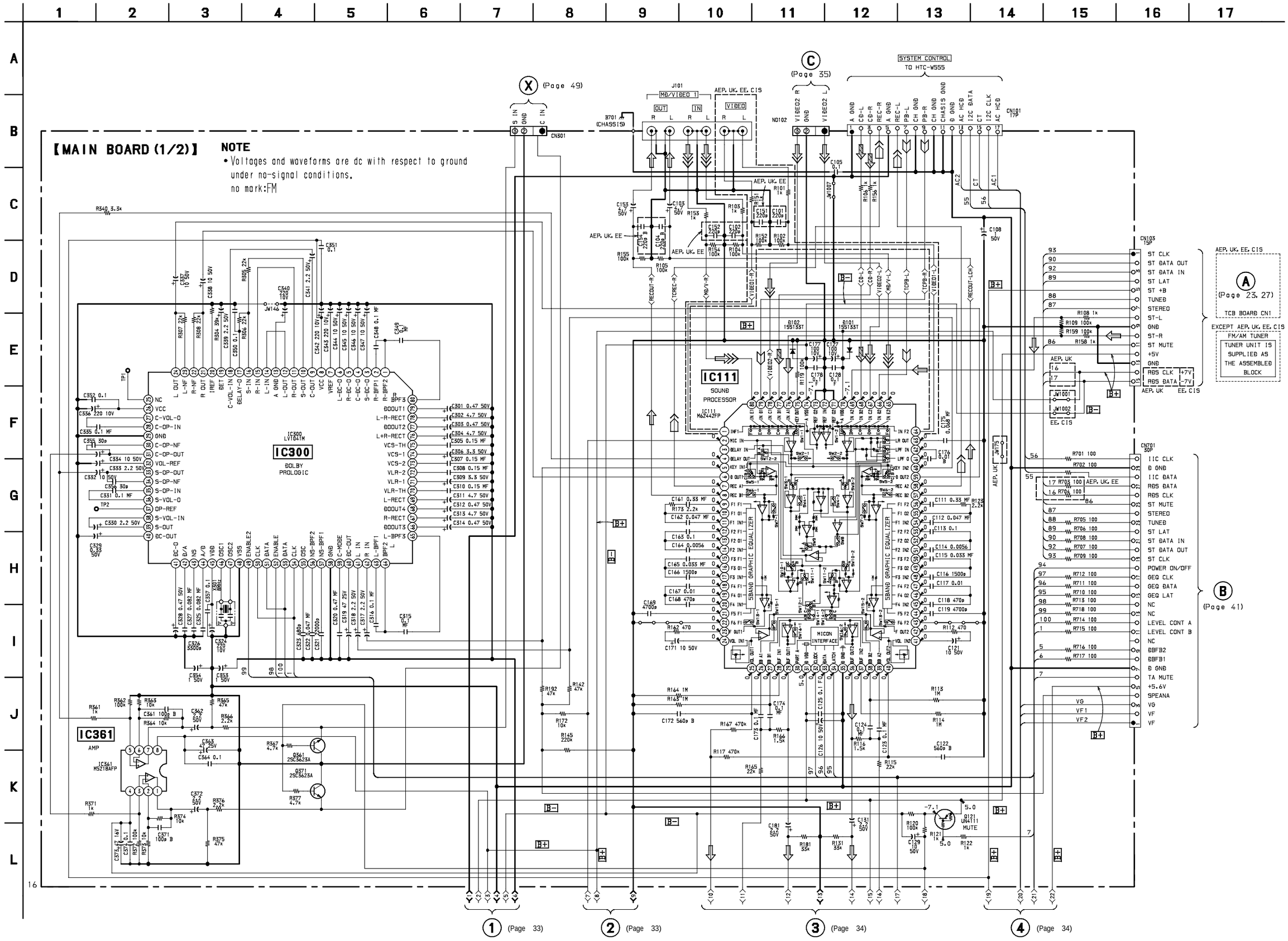

5-9. SCHEMATIC DIARGAM – MAIN (2/2) SECTION –

• Refer to page 29 for Printed Wiring Board.
• Refer to page 58 for IC Block Diagrams.

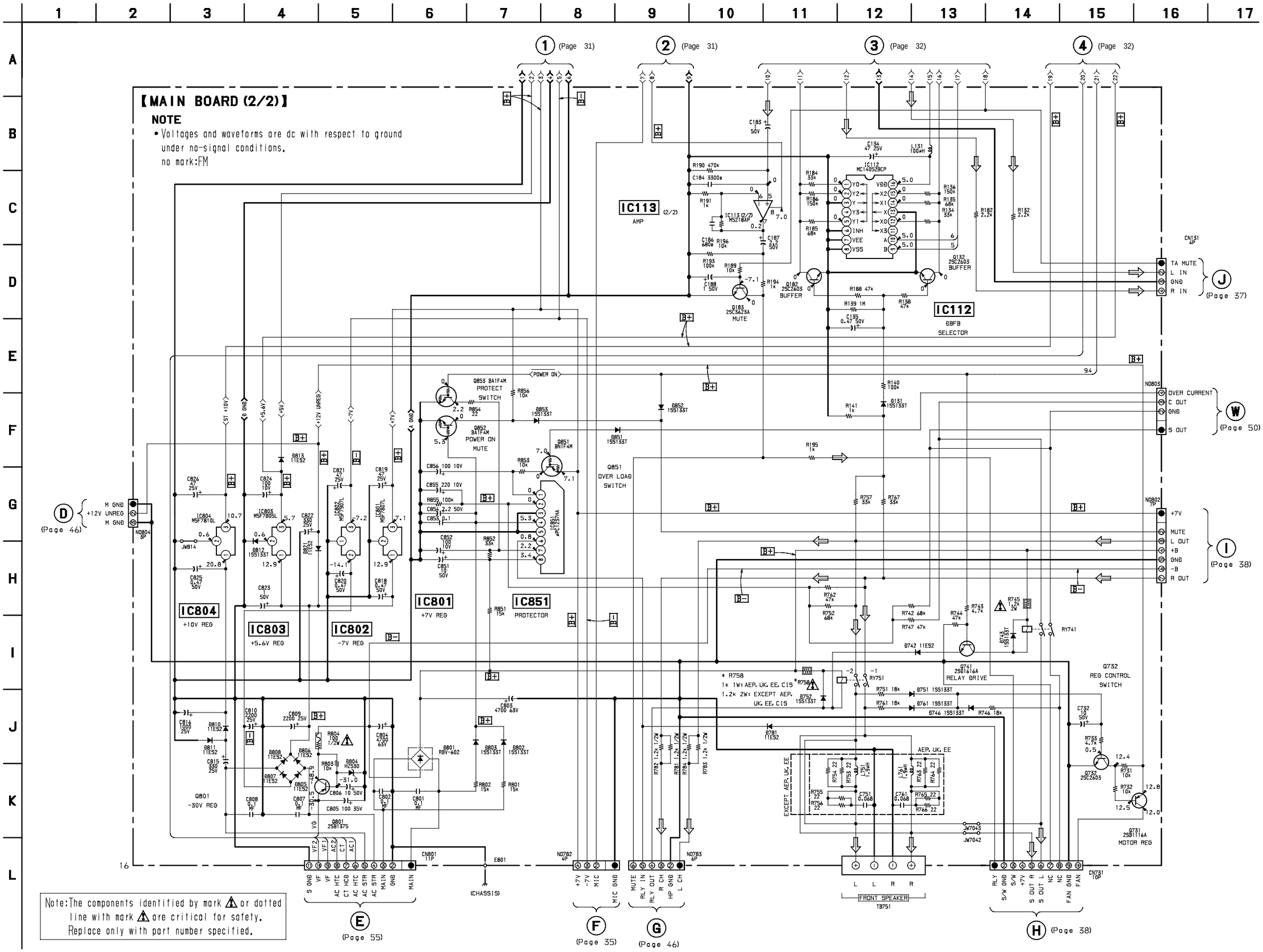

5-10. SCHEMATIC DIAGRAM – AV/MIC SECTION –

• Refer to page 58 for IC Block Diagrams.

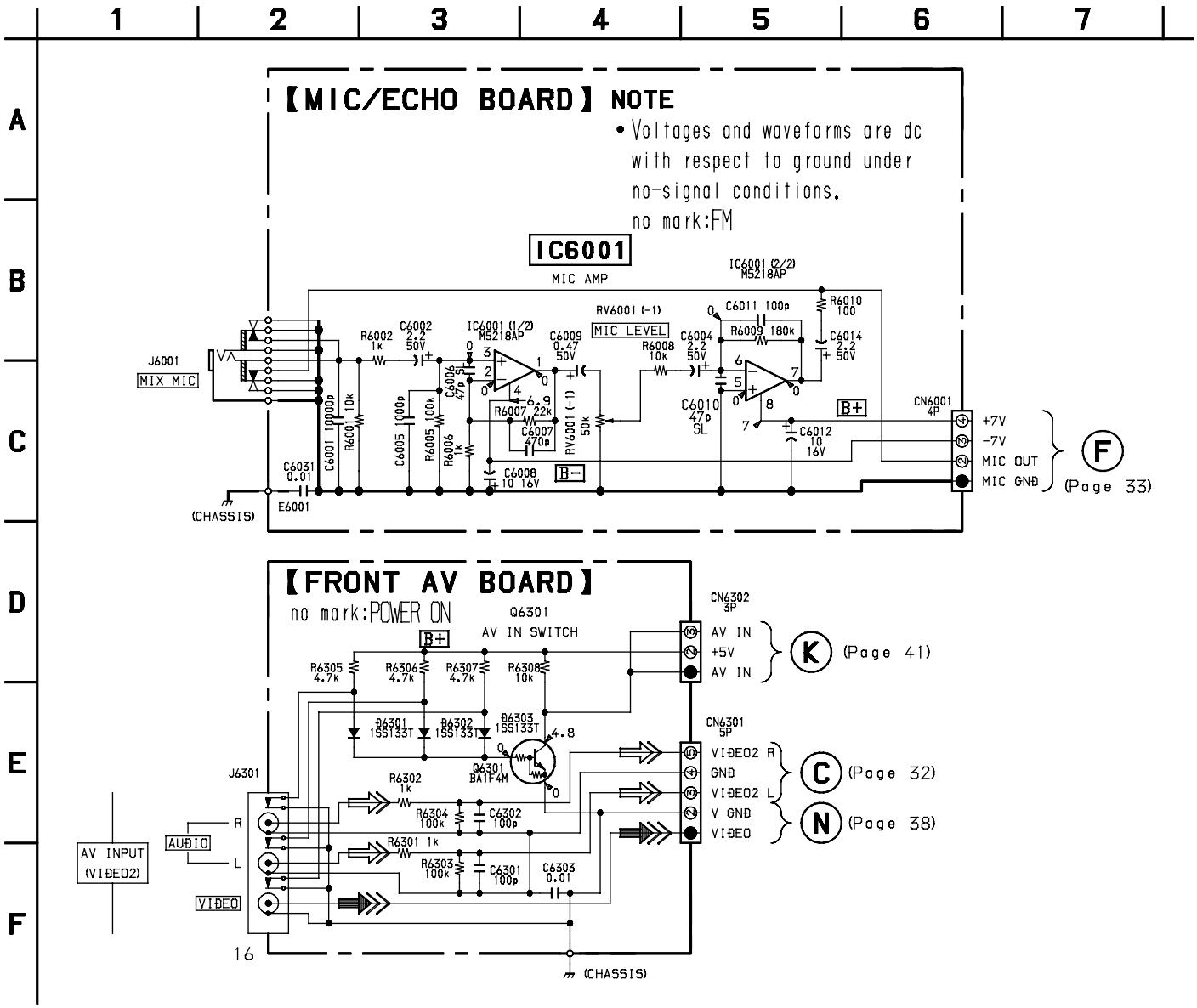

5-11. Printed Wiring Board – AV/MIC Section → Refer to page 12 for Circuit Boards Location.

【MIC/ECHO BOARD】

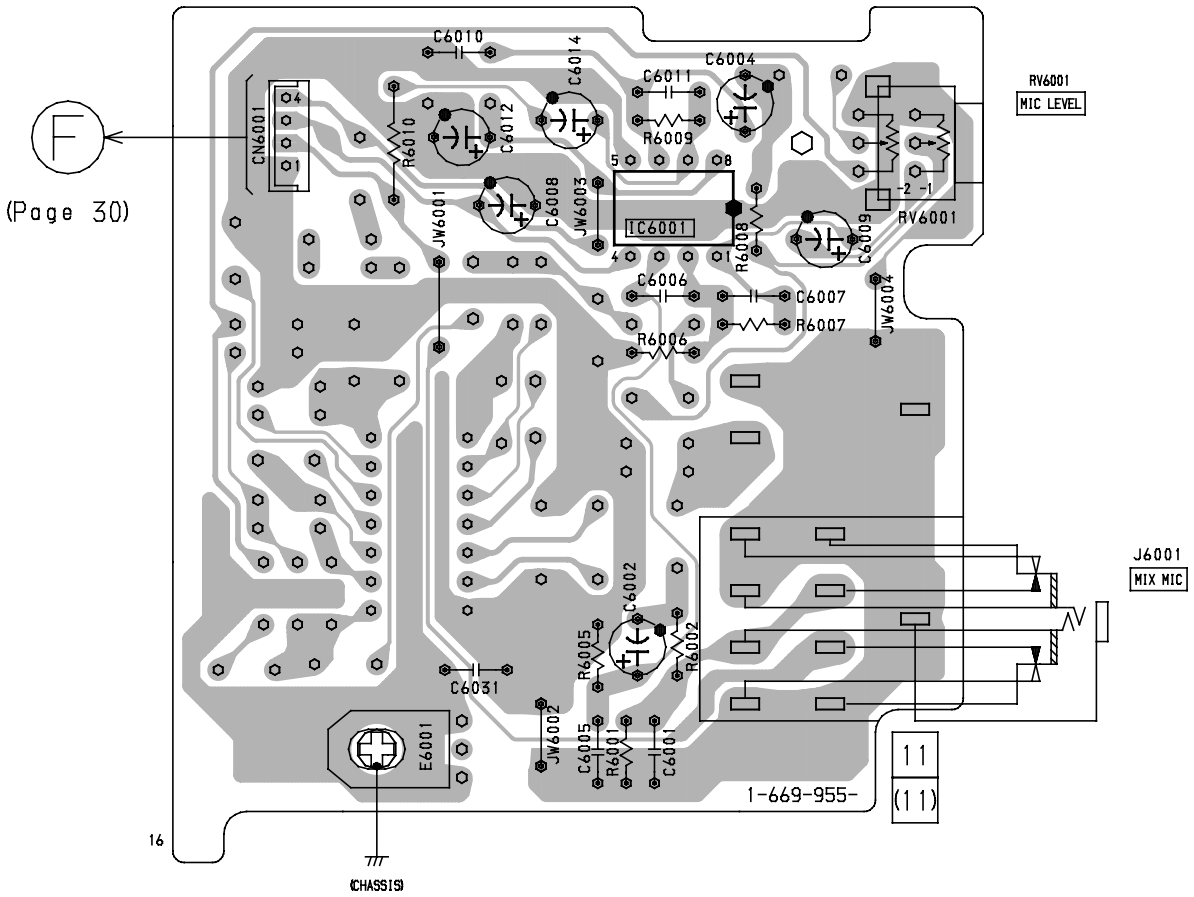

【FRONT AV BOARD】

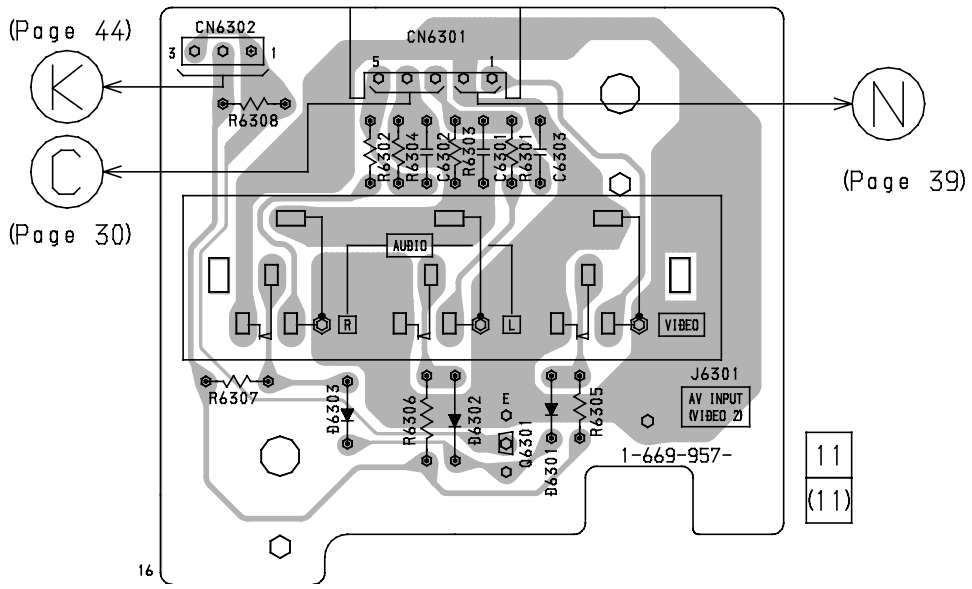

5-12. SCHEMATIC DIAGRAM – POWER AMP SECTION –

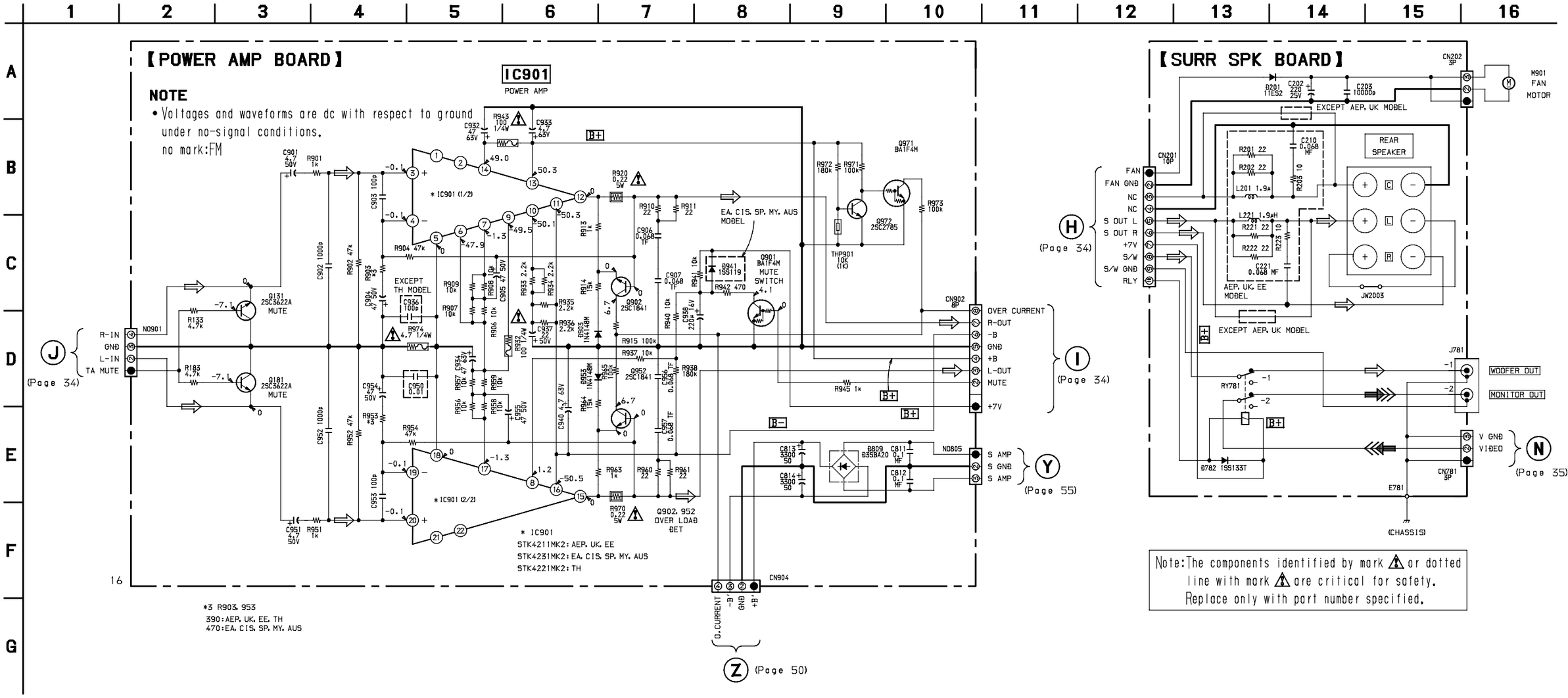

Note: The components identified by mark ⚠ or dotted line with mark ⚠ are critical for safety. Replace only with part number specified.

5-13. PRINTED WIRING BOARD – POWER AMP SECTION –

• Refer to page 12 for Circuit Boards Location.

【SURR SPK BOARD】

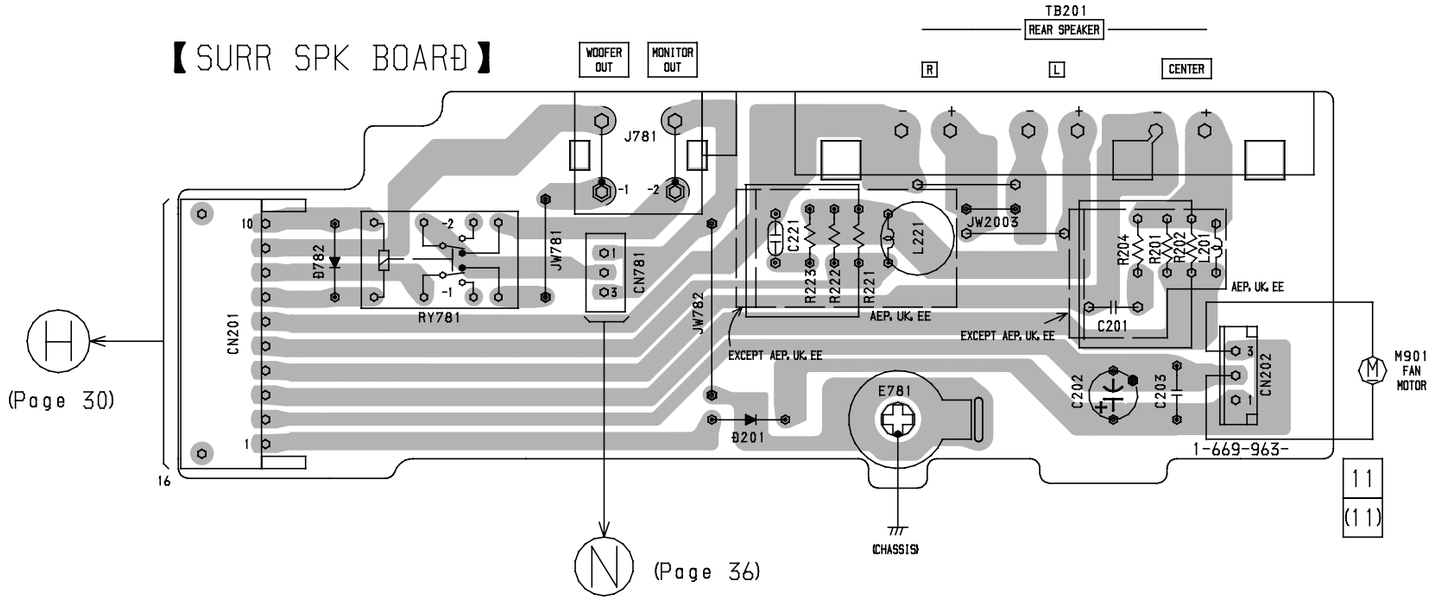

【POWER AMP BOARD】

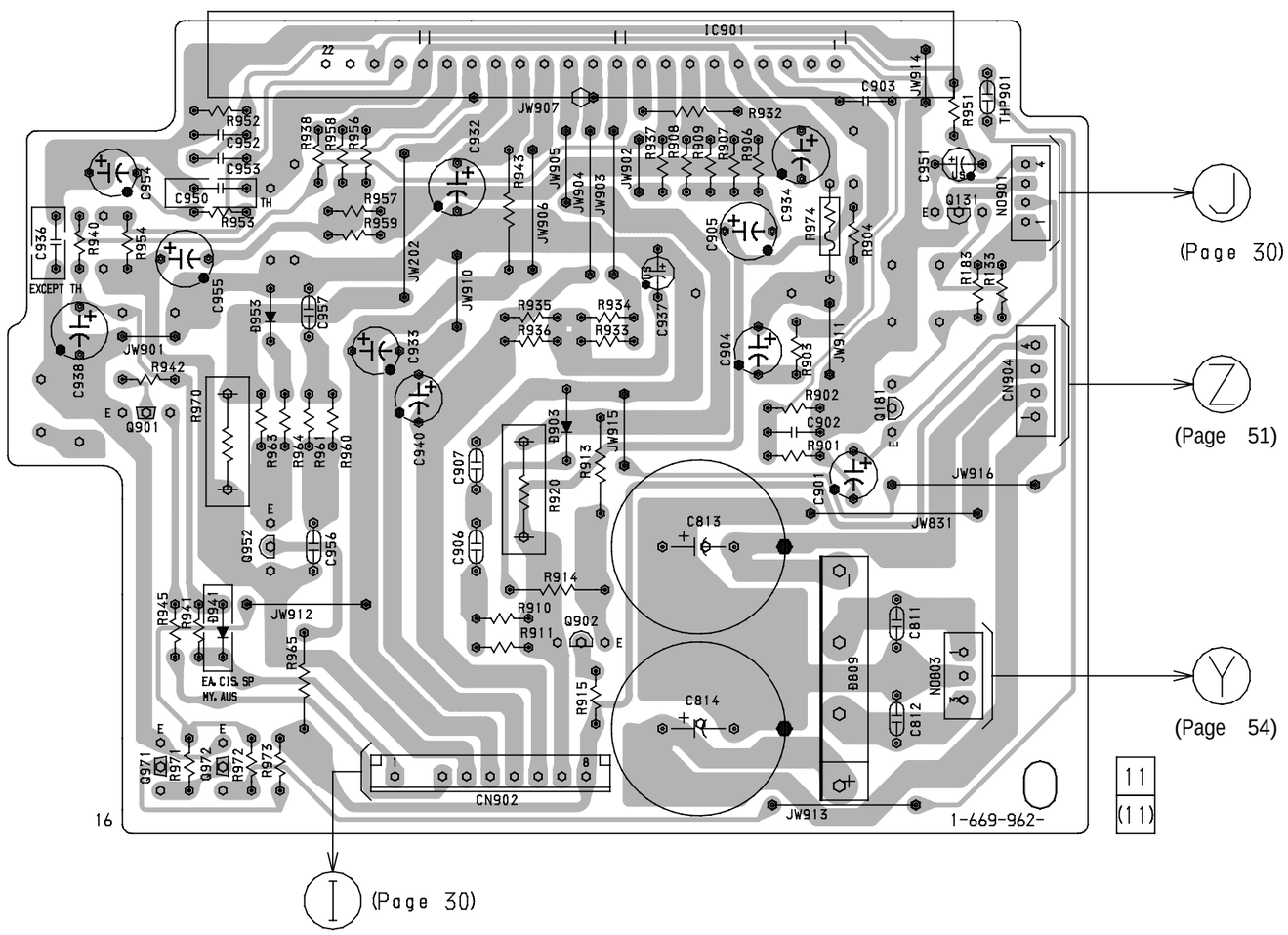

5-14. SCHEMATIC DIAGRAM – DISPLAY SECTION –

• Refer to page 59 for IC Block Diagrams.

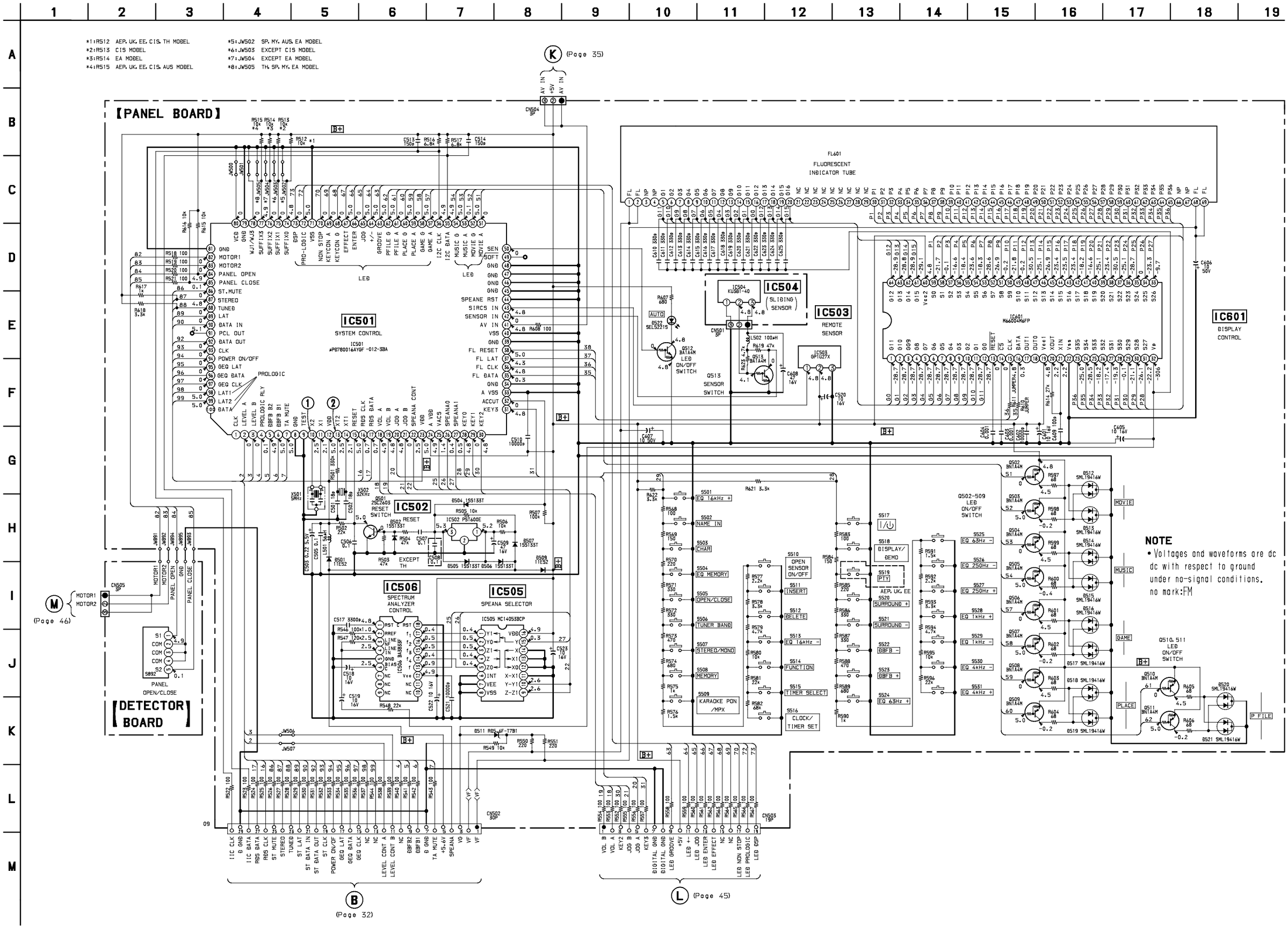

5-15. PRINTED WIRING BOARD – DISPLAY SECTION –

• Refer to page 12 for Circuit Boards Location.

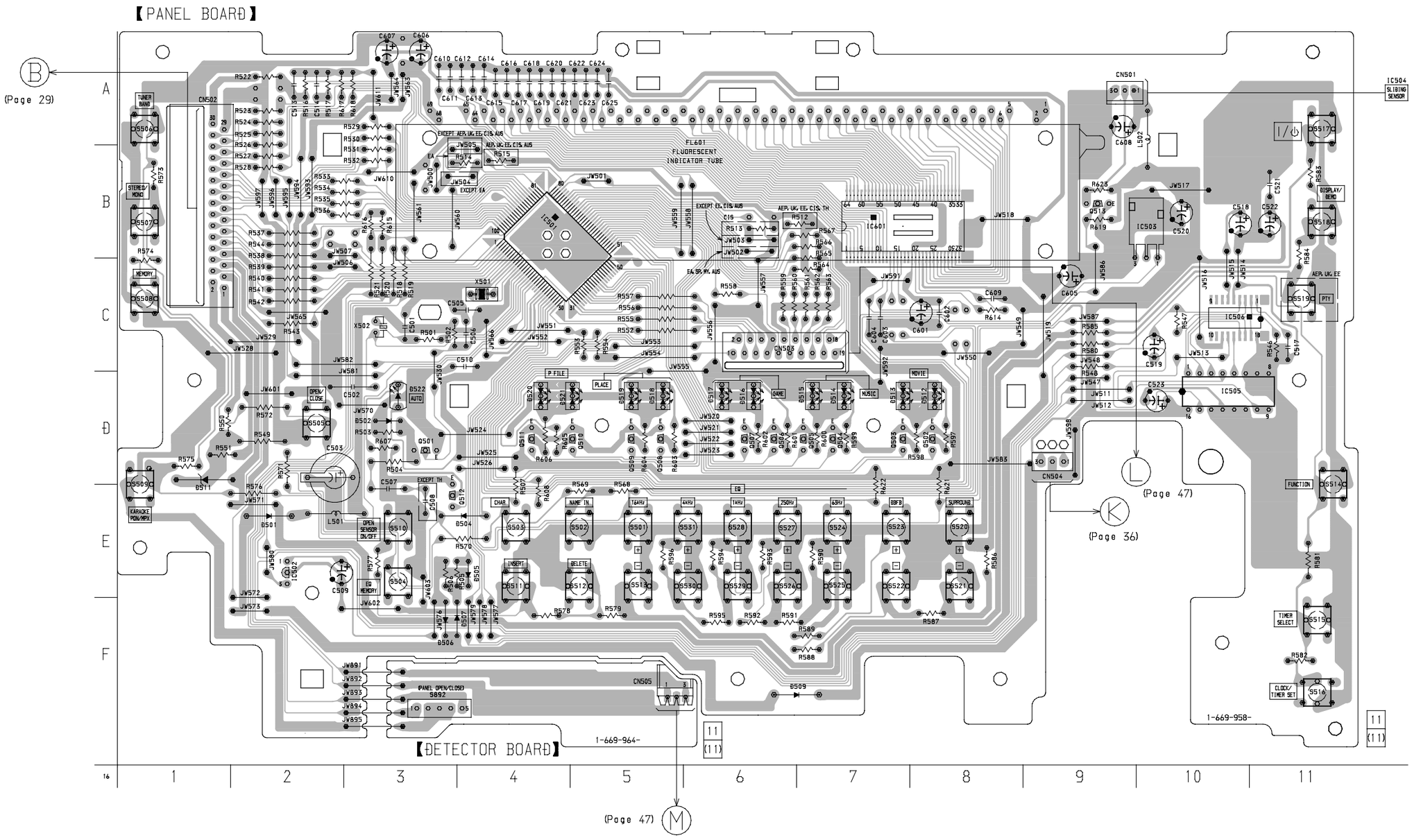

• **Semiconductor Location**

Ref. No.	Location
D501	E-2
D502	D-3
D504	E-4
D505	F-4
D506	F-3
D507	F-3
D509	F-6
D511	D-1
D512	D-8
D513	D-7
D514	D-7
D515	D-7
D516	D-6
D517	D-6
D518	D-5
D519	D-5
D520	D-4
D521	D-5
D522	D-3
IC501	B-4
IC502	E-2
IC503	B-10
IC505	D-10
IC506	C-10
IC601	B-7
Q501	D-3
Q502	D-8
Q503	D-7
Q505	D-7
Q504	D-7
Q506	D-6
Q507	D-6
Q508	D-5
Q509	D-5
Q510	D-5
Q511	D-4
Q512	E-3
Q513	B-9

5-16. SCHEMATIC DIAGRAM – SLIDING PANEL SECTION –

• Refer to page 59 for IC Block Diagrams.

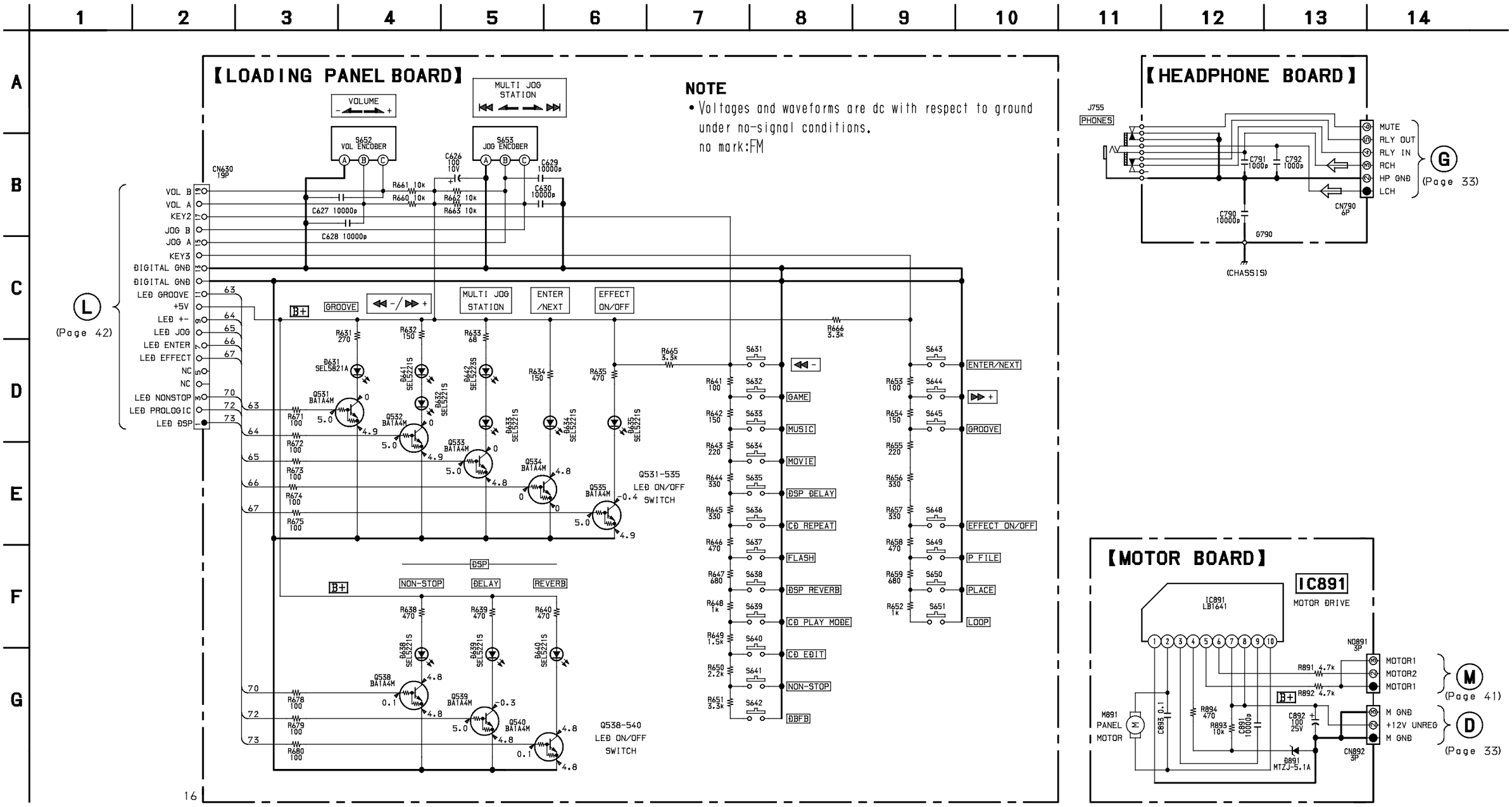

5-17. PRINTED WIRING BOARD – SLIDING PANEL SECTION –

• Refer to page 12 for Circuit Boards Location.

【LOADING PANEL BOARD】

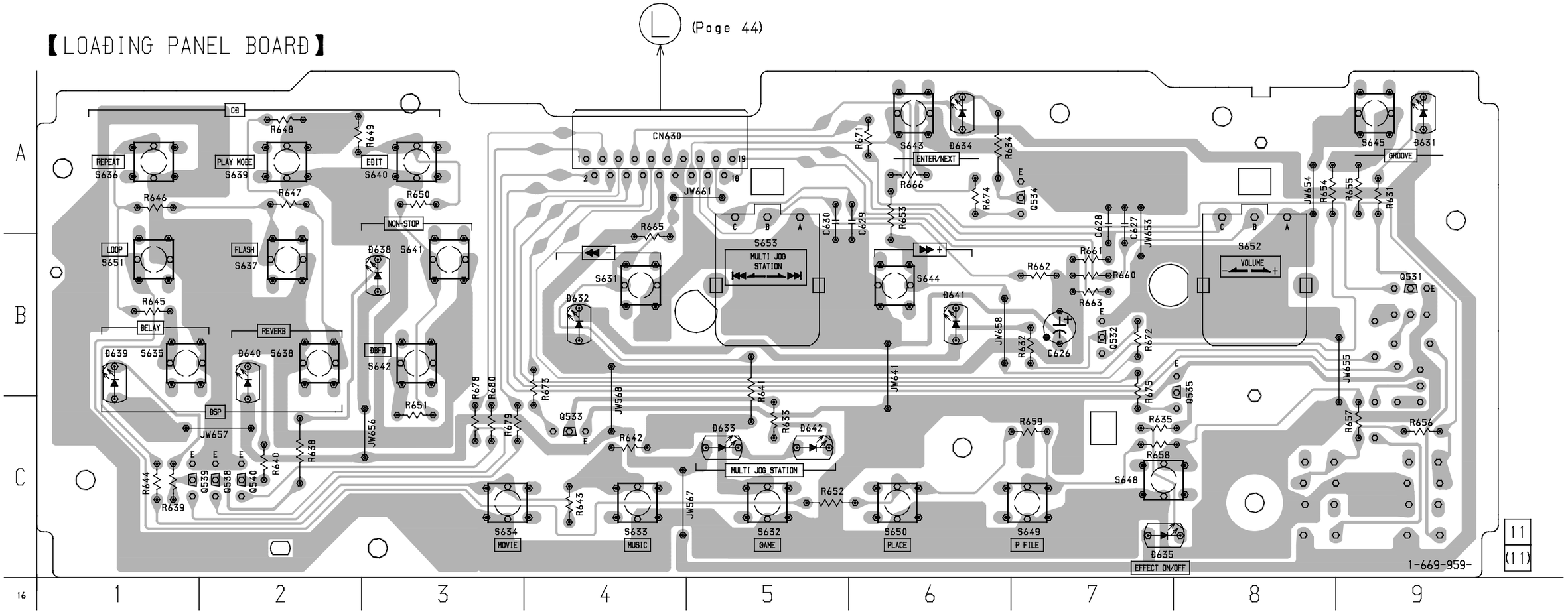

【MOTOR BOARD】

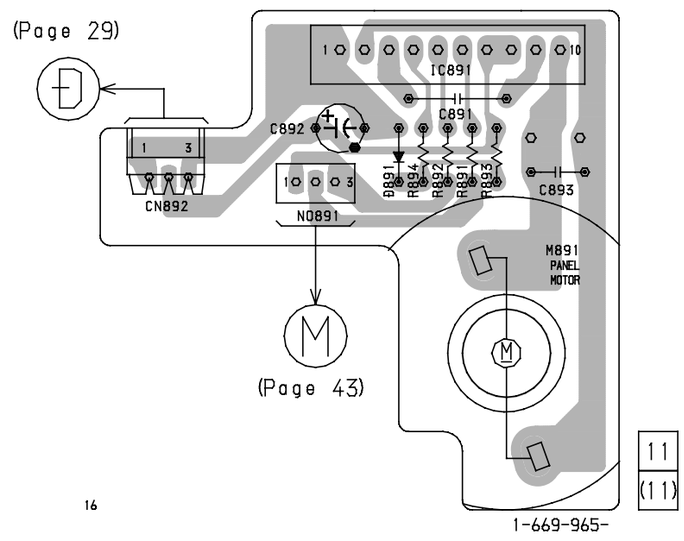

【HEADPHONE BOARD】

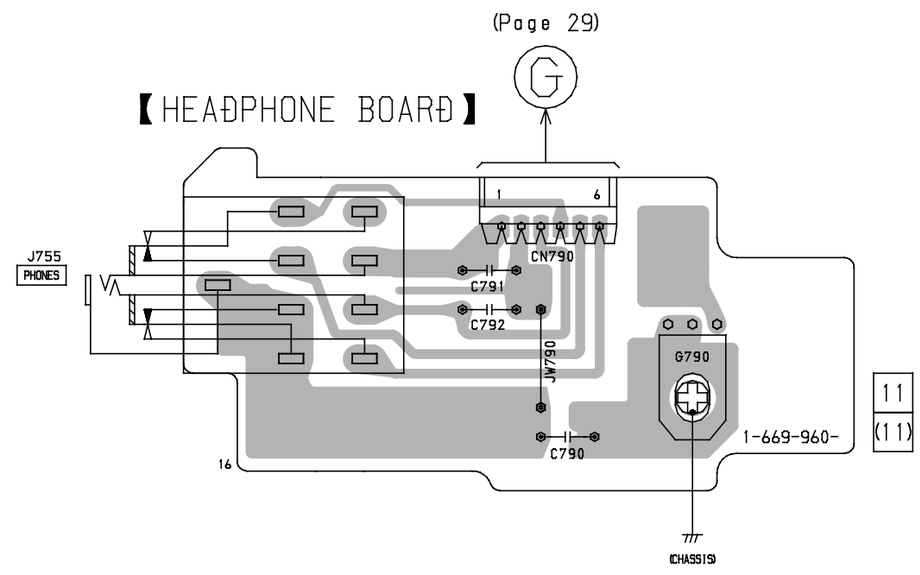

5-18. SCHEMATIC DIAGRAM – SURROUND AMP SECTION –

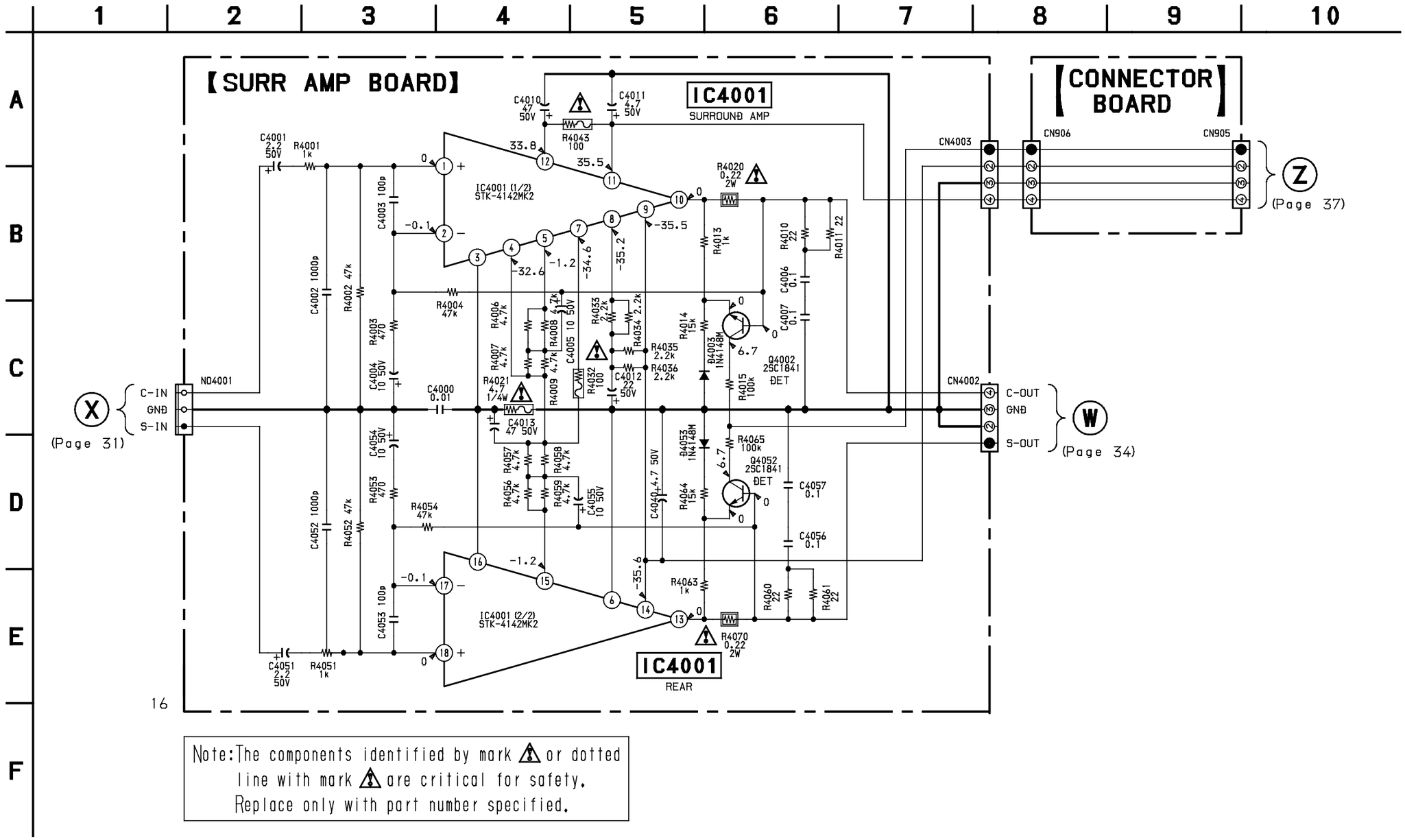

Note: The components identified by mark ⚠ or dotted line with mark ⚠ are critical for safety.
Replace only with part number specified.

5-19. PRINTED WIRING BOARD – SURROUND AMP SECTION –

• Refer to page 12 for Circuit Boards Location.

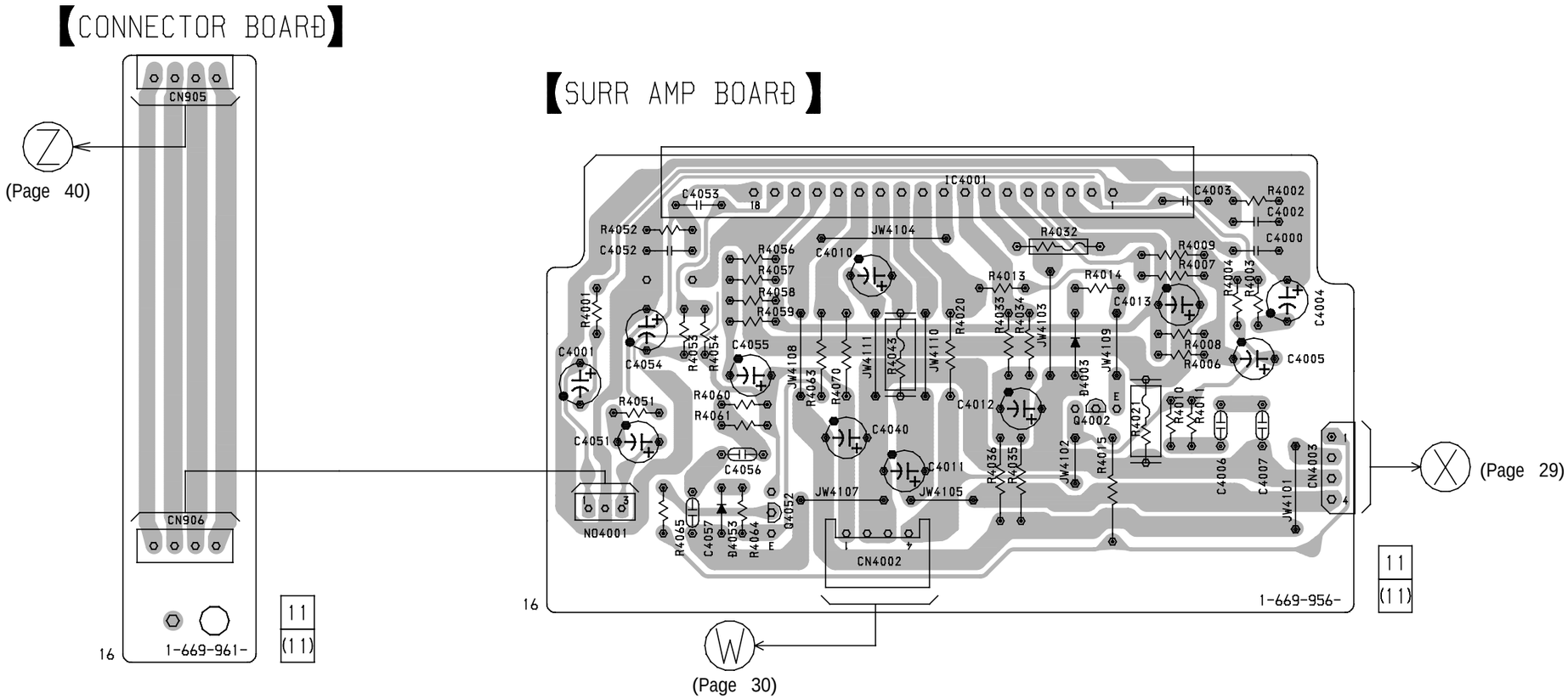

5-20. PRINTED WIRING BOARD – TRANS SECTION –

• Refer to page 12 for Circuit Boards Location.

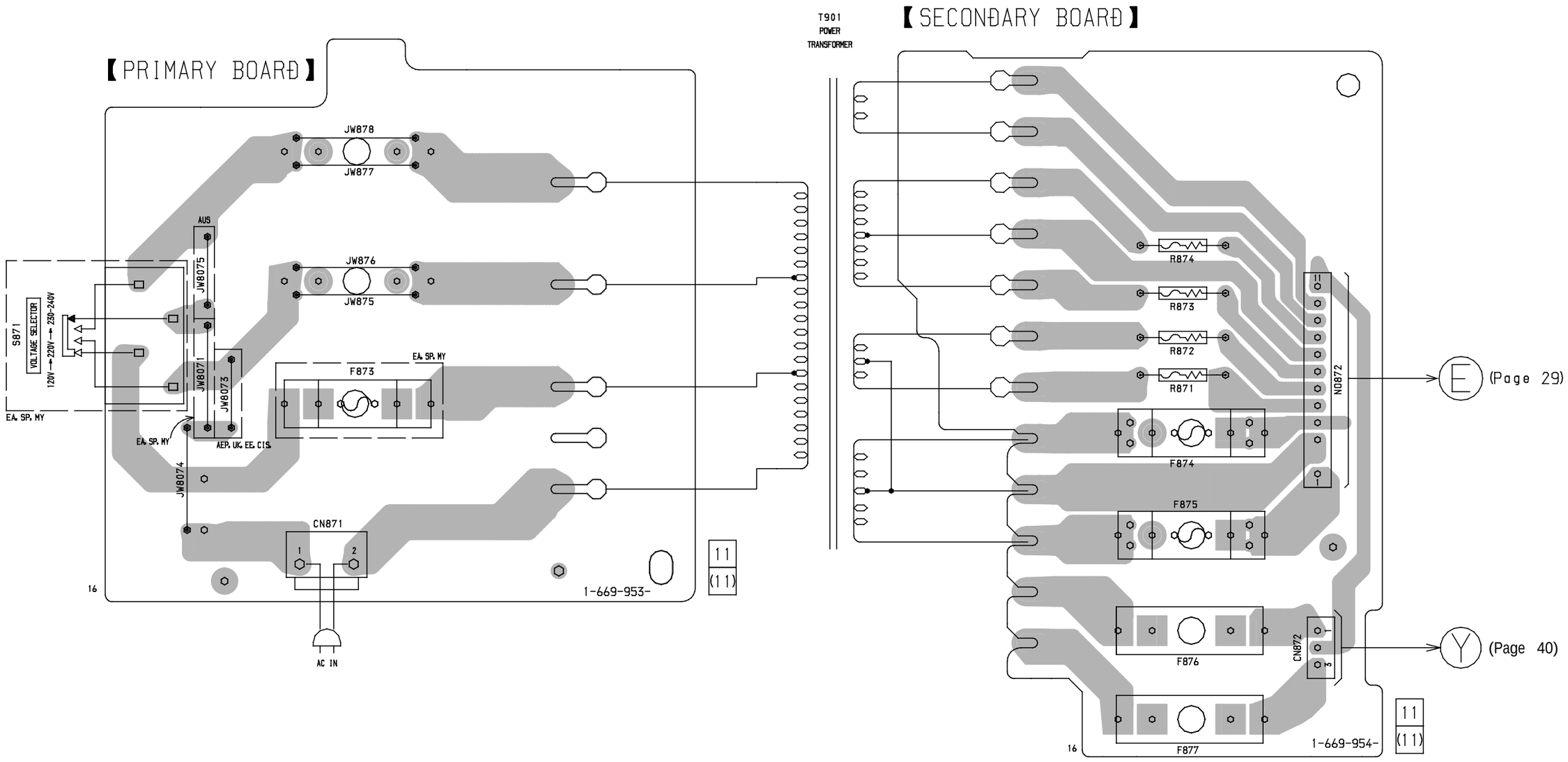

5-21. SCHEMATIC DIAGRAM – TRANS SECTION –

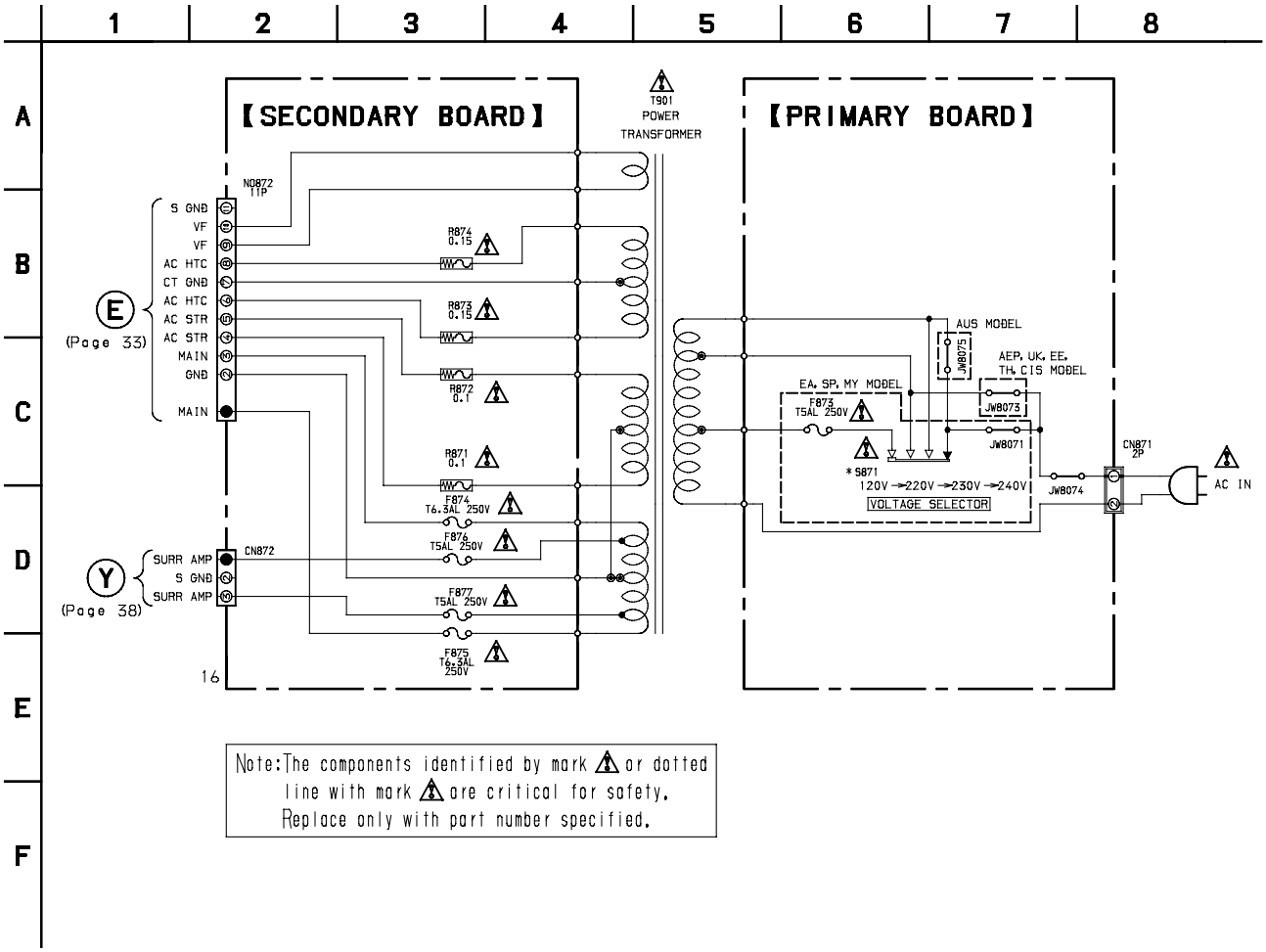

5-22. IC BLOCK DIAGRAMS

• Tuner section

IC21 LC72130

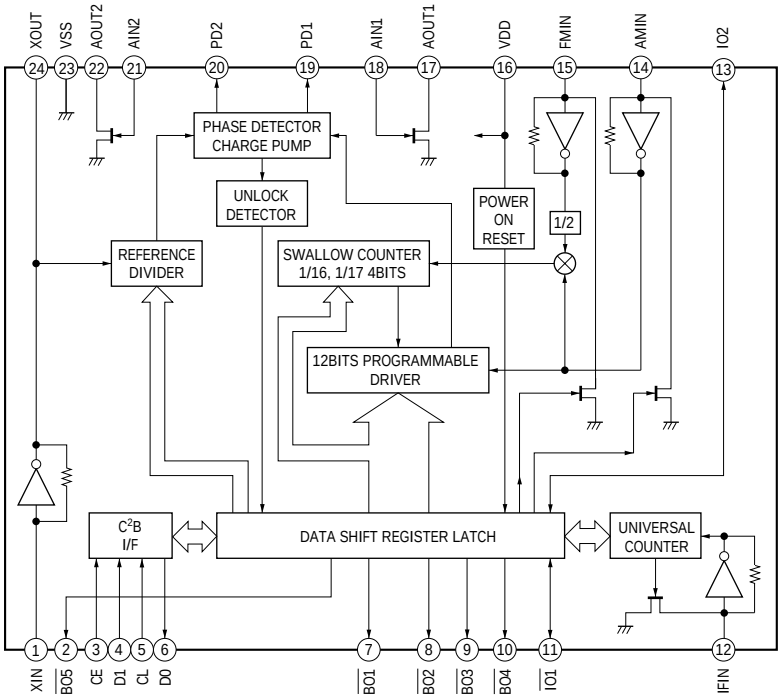

IC41 LA1838

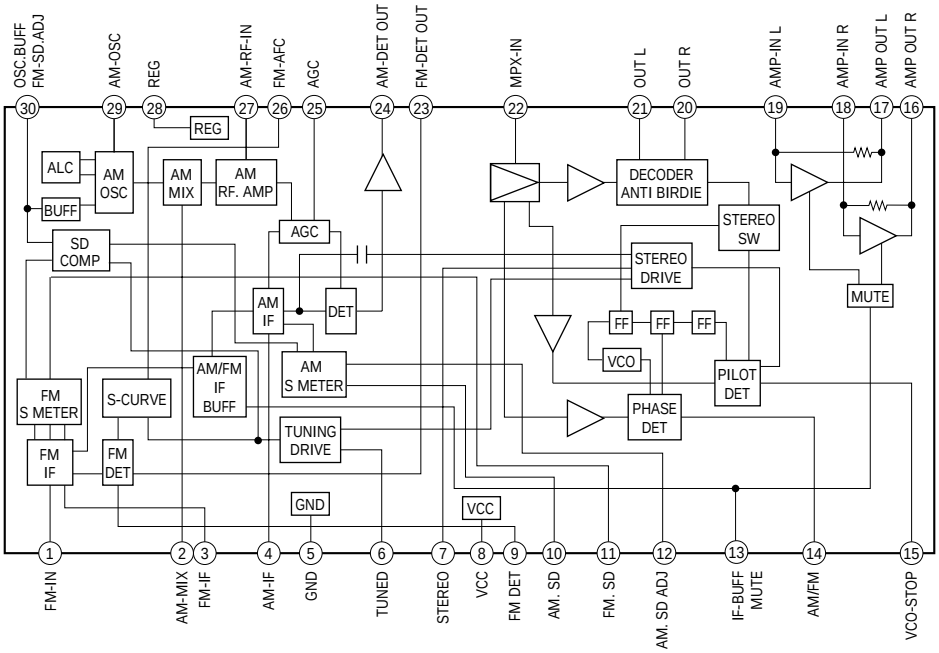

IC1701 IR3R42

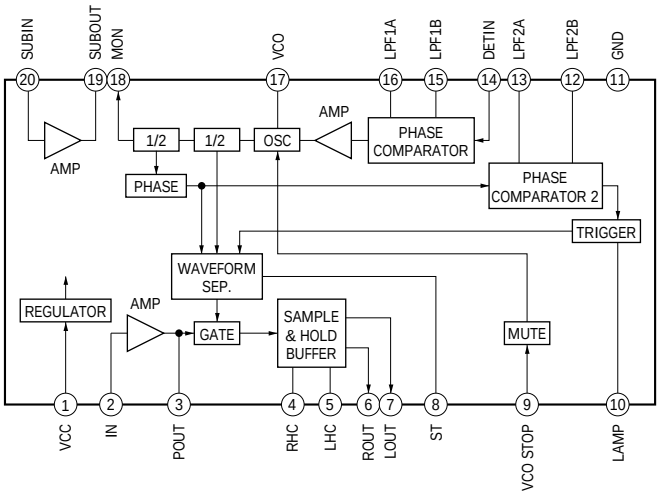

IC1702 MC14053BCP

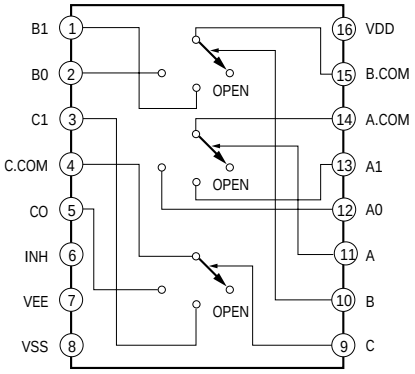

IC1751 NJM4558D

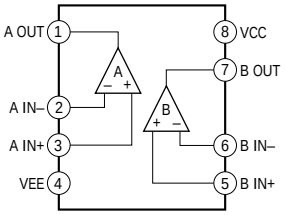

IC1752 BU1922

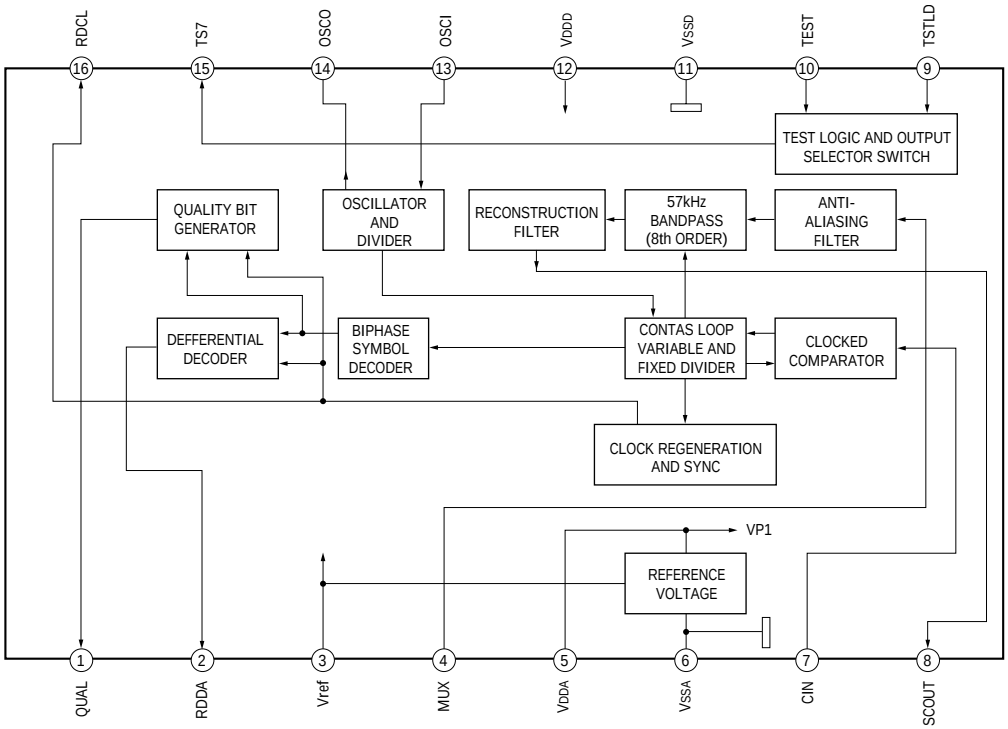

• **Main (1/2) section**

IC401 M65850P

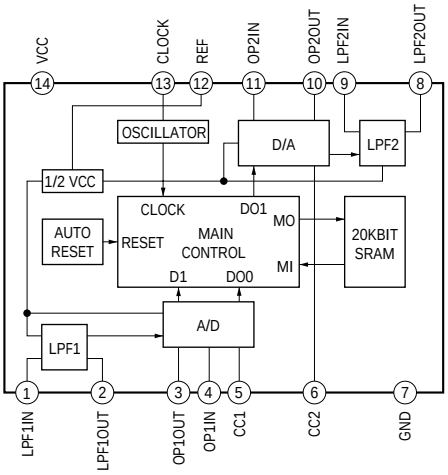

IC402 MC14053BCP

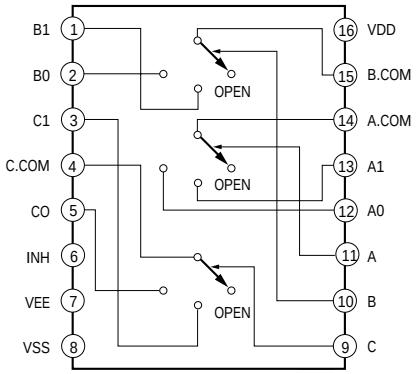

• **Main (2/2) section**

IC112 MC14052BCP

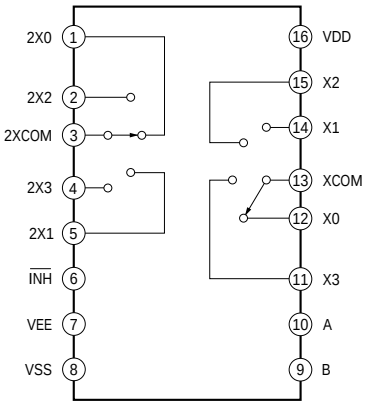

IC851 uPC1237HA

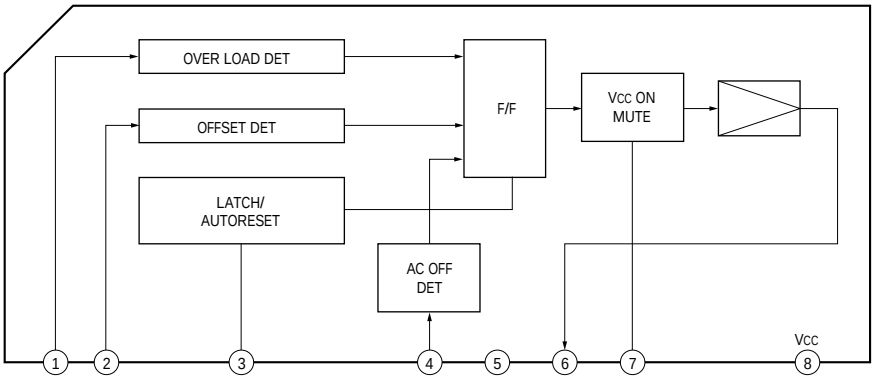

• **MIC/ECHO section**

IC6002 M65850P

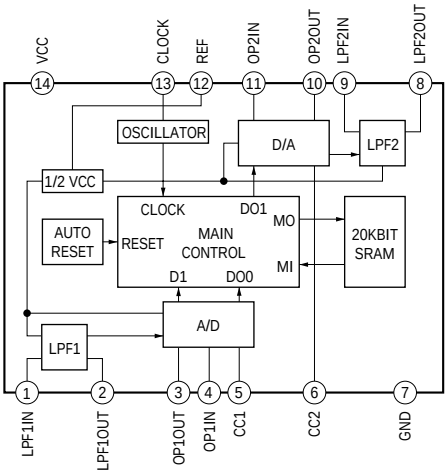

• **Display section**

IC505 MC14053BCP

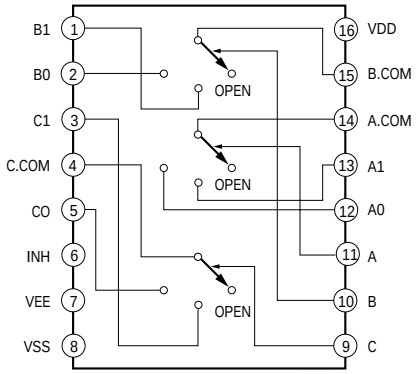

IC506 BA3833F

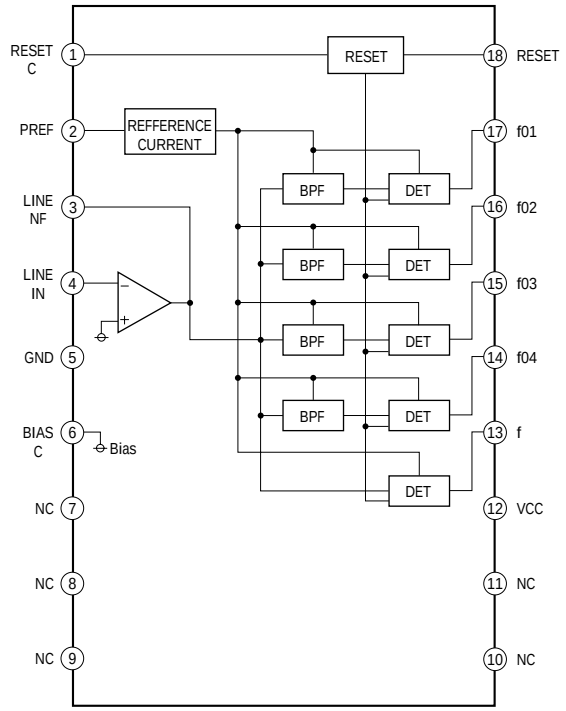

• **Panel/Motor section**

IC891 LB1641

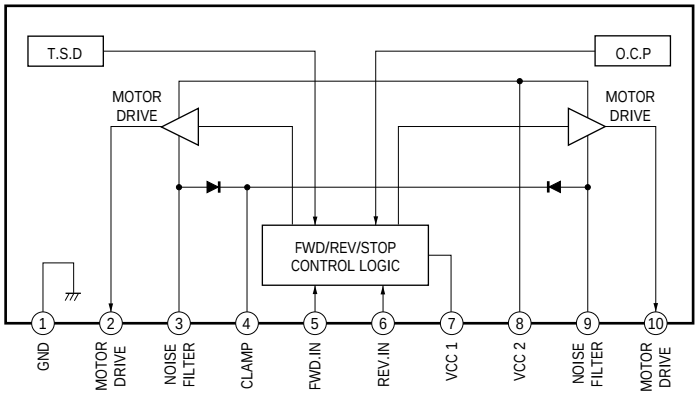

5-23. IC PIN FUNCTION

• IC501 SYSTEM CONTROL (uPD780016AYGF-012-3BA)

Pin No.	Pin Name	I/O	Description
1	CLK	O	Not used
2	LEVEL A	O	Surround level A signal output
3	LEVEL B	O	Surround level B signal output
4	PROLOGIC RLY	O	Not used
5	DBFB B2	O	DBFB level 2 signal output
6	DBFB B1	O	DBFB level 1 signal output
7	TA MUTE	O	Mute signal output
8	GND	—	Ground
9	TEST	—	Test terminal (Connected to ground)
10	X2	O	X' tal (5MHz)
11	X1	I	
12	VDD	—	Power supply (+5V)
13	XT2	O	X' tal (32kHz)
14	XT1	I	
15	RESET	I	Reset signal input
16	RDS CLK	I	RDS clock input
17	RDS DATA	I	RDS data input
18	VOL A	I	Rotary encoder (VOLUME) pulse input
19	VOL B	I	
20	JOG A	I	Rotary encoder (MULTI JOG STATION) pulse input
21	JOG B	I	
22	SPEANA CONT	O	Spectrum analyzer control output
23	VDD	—	Power supply (+5V)
24	A VDD	—	Analog power supply (+5V)
25	VACS	I	Audio input for VACS control
26	SPEANA0	I	Spectrum analyzer data input
27	SPEANA1	I	
28	KEY0	I	Key data input
29	KEY1	I	
30	KEY2	I	
31	KEY3	I	
32	ACCUT	I	Back up signal input
33	A VSS	—	Analog ground
34	GND	—	Ground
35	FL DATA	O	FL data output
36	FL CLK	O	FL clock output
37	FL LAT	O	FL latch output
38	FL RESET	O	FL reset output
39	GND	—	Ground
40	VSS	—	Ground

• Abbreviation
FL : Fluorescent indicator tube

Pin No.	Pin Name	I/O	Description
41	AV IN	I	AV INPUT (VIDEO 2) switch input
42	SENSOR IN	I	Sliding (panel) sensor signal input
43	SIRCS IN	I	Remote sensor signal input
44	SPEANE RST	O	Spectrum analyzer reset output
45	GND	—	Ground
46	GND	—	
47	GND	—	
48	GND	—	
49	SOFT	O	Soft test terminal
50	SEN	O	Audio indicator output
51	MOVIE A	O	LED driver output
52	MOVIE G	O	
53	MUSIC A	O	
54	MUSIC G	O	
55	I2C DATA	I/O	Serial data input/output
56	I2C CLK	I/O	Serial clock input/output
57	GAME A	O	LED driver output
58	GAME G	O	
59	PLACE A	O	
60	PLACE G	O	
61	PFILE A	O	
62	PFILE G	O	
63	GROOVE	O	
64	+/–	O	
65	JOG	O	
66	ENTER	O	
67	EFECT	O	
68	KEYCON G	O	Not used
69	KEYCON A	O	
70	NON STOP	O	LED driver output
71	VSS	—	Ground
72	DELAY	O	LED driver output
73	REVER B	O	
74	SUFFIX0	I	Destination terminal
75	SUFFIX1	I	
76	SUFFIX2	I	
77	SUFFIX3	I	
78	WJ1/WJ3	I	Model select terminal
79	GND	—	Ground
80	VCD	I	VCD select terminal “L”: NON-VCD (Connected to ground)

Pin No.	Pin Name	I/O	Description
81	GND	—	Ground
82	MOTOR1	O	Panel motor control output
83	MOTOR2	O	
84	PANEL OPEN	O	Panel open switch output
85	PANEL CLOSE	O	Panel close switch output
86	ST. MUTE	O	ST mute signal output
87	STEREO	I	Stereo detection input for tuner
88	TUNED	I	Tuner detection input for tuner
89	LAT	O	Tuner PLL latch output
90	DATA IN	I	Tuner PLL data input
91	PCL OUT	O	Sub clock output
92	DATA OUT	O	Tuner PLL data output
93	CLK	O	Tuner clock output
94	POWER ON/OFF	O	Power on/off control output
95	GEQ LAT	O	GEQ latch output
96	GEQ DATA	O	GEQ data output
97	GEQ CLK	O	GEQ clock output
98	LAT1	O	Not used
99	LAT2	O	
100	DATA	O	

- Abbreviation
  GEQ : Graphic Equalizer
  PLL : Phase Locked Loop

SECTION 6
EXPLODED VIEWS

NOTE:
- Items marked "*" are not stocked since they are seldom required for routine service. Some delay should be anticipated when ordering these items.
- Abbreviation
  EE : East European
  EA : Saudi Arabia
  SP : Singapore
  MY : Malaysia
  AUS : Australian
  TH : Thai
- The mechanical parts with no reference number in the exploded views are not supplied.
- Hardware (# mark) list and accessories and packing materials are given in the last of this parts list.

The components identified by mark ⚠ or dotted line with mark ⚠ are critical for safety. Replace only with part number specified.

6-1. CASE AND SLIDING PANEL SECTION

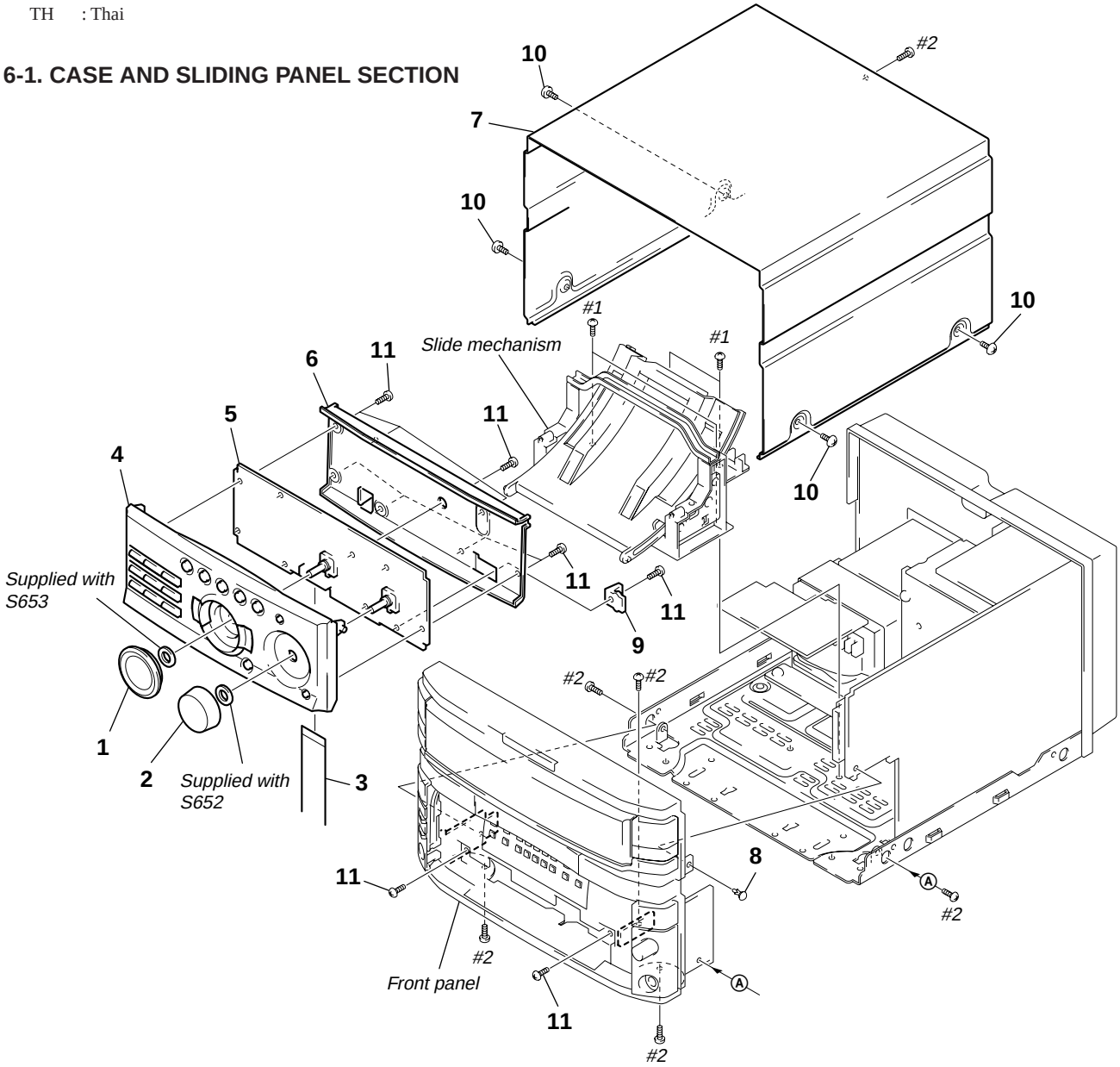

Ref. No.	Part No.	Description	Remarks
1	4-900-825-01	KNOB (JOG)	
2	4-900-826-01	KNOB (VOLUME)	
3	1-773-125-11	WIRE (FLAT TYPE) (19 CORE)	
4	X-4950-007-1	SLIDING PANEL SUB ASSY	
* 5	1-669-959-11	LOADING PANEL BOARD	
6	4-900-855-01	COVER	
* 7	4-900-858-01	CASE	
8	4-812-134-00	RIVET (DIA. 3.5), NYLON	
* 9	4-900-852-01	HOLDER LEVEL	
10	3-363-099-01	SCREW (CASE 3 TP2)	
11	4-951-620-01	SCREW (2.6 × 8), +BVTP	

6-2. FRONT PANEL SECTION

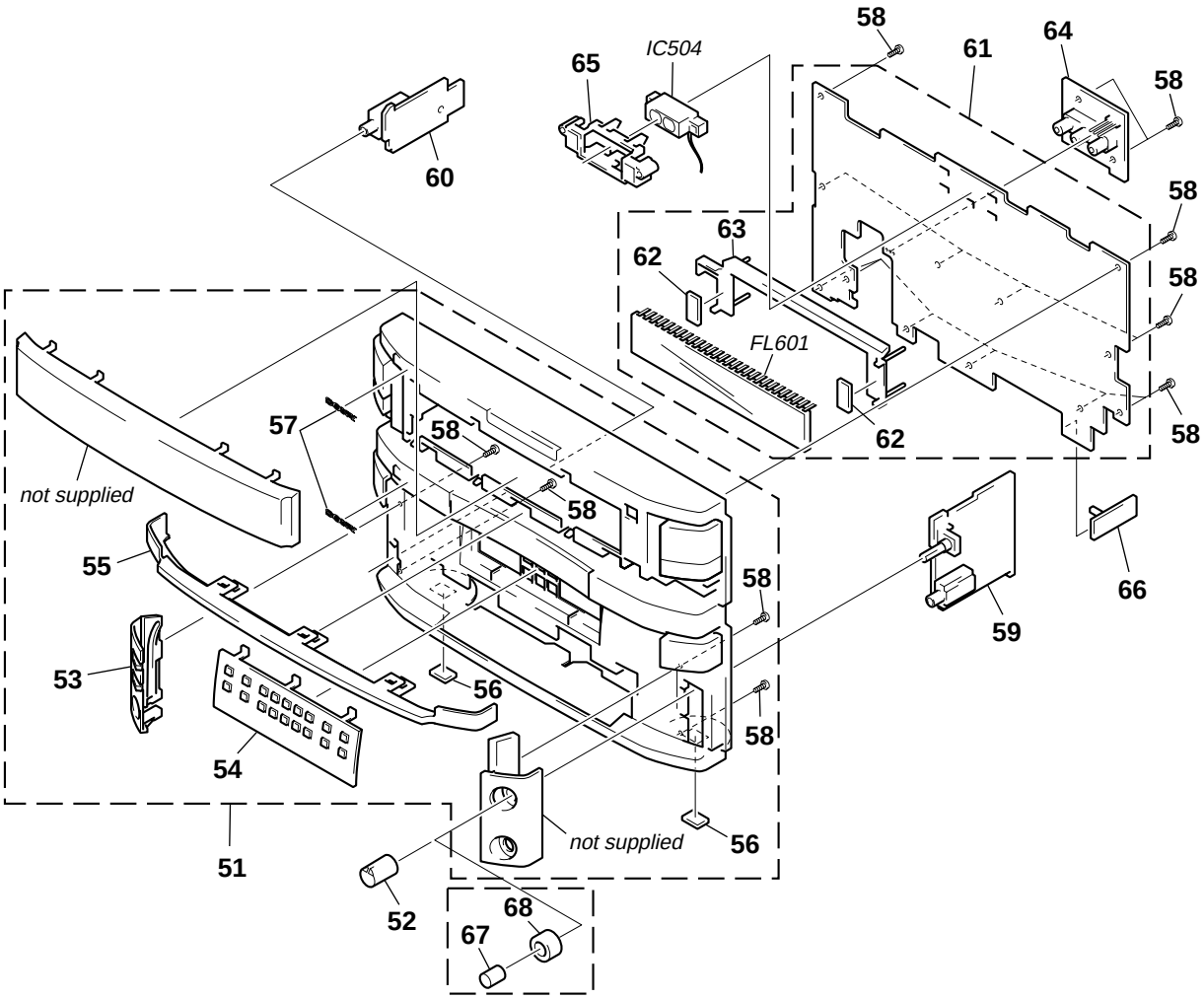

EXCEPT TH MODEL

Ref. No.	Part No.	Description	Remarks
51	X-4950-006-1	FRONT PANEL ASSY (EA, SP, MY, TH, AUS)	
51	X-4950-008-1	FRONT PANEL ASSY (AEP, UK, EE, CIS)	
52	4-900-832-01	KNOB (MIC)	
53	X-4949-993-1	ESCUTCHEON (L) ASSY	
54	X-4949-994-1	ESCUTCHEON (EQ) ASSY	
55	X-4950-002-1	ESCUTCHEON (ST) ASSY (AEP, UK, EE, CIS)	
56	4-977-358-11	CUSHION	
57	4-962-708-11	EMBLEM (4-A), SONY	
58	4-951-620-01	SCREW (2.6 × 8), +BVTP	
* 59	A-4414-202-A	MIC/ECHO BOARD, COMPLETE (EXCEPT TH)	
* 59	A-4414-778-A	MIC/ECHO BOARD, COMPLETE (TH)	
* 60	1-669-960-11	HEADPHONE BOARD	
* 61	A-4414-223-A	PANEL BOARD, COMPLETE (SP, MY)	
* 61	A-4414-229-A	PANEL BOARD, COMPLETE (AEP, UK, EE)	
* 61	A-4414-536-A	PANEL BOARD, COMPLETE (AUS)	
* 61	A-4414-541-A	PANEL BOARD, COMPLETE (CIS)	
* 61	A-4414-786-A	PANEL BOARD, COMPLETE (TH)	
* 61	A-4417-305-A	PANEL BOARD, COMPLETE (EA)	
* 62	4-932-810-11	CUSHION (FL)	
* 63	4-900-849-01	HOLDER (FL)	
* 64	1-669-957-11	FRONT AV BOARD	
* 65	4-210-042-01	BRACKET (SENSOR)	
* 66	1-669-964-11	DETECTOR BOARD	
67	4-900-868-01	KNOB (CENTER) (EXCEPT TH)	
68	4-900-867-01	KNOB (CONTROL) (EXCEPT TH)	
FL601	1-517-775-11	INDICATOR TUBE, FLUORESCENT	
IC504	8-719-070-85	DIODE KU381-40	

6-3. SLIDE MECHANISM SECTION

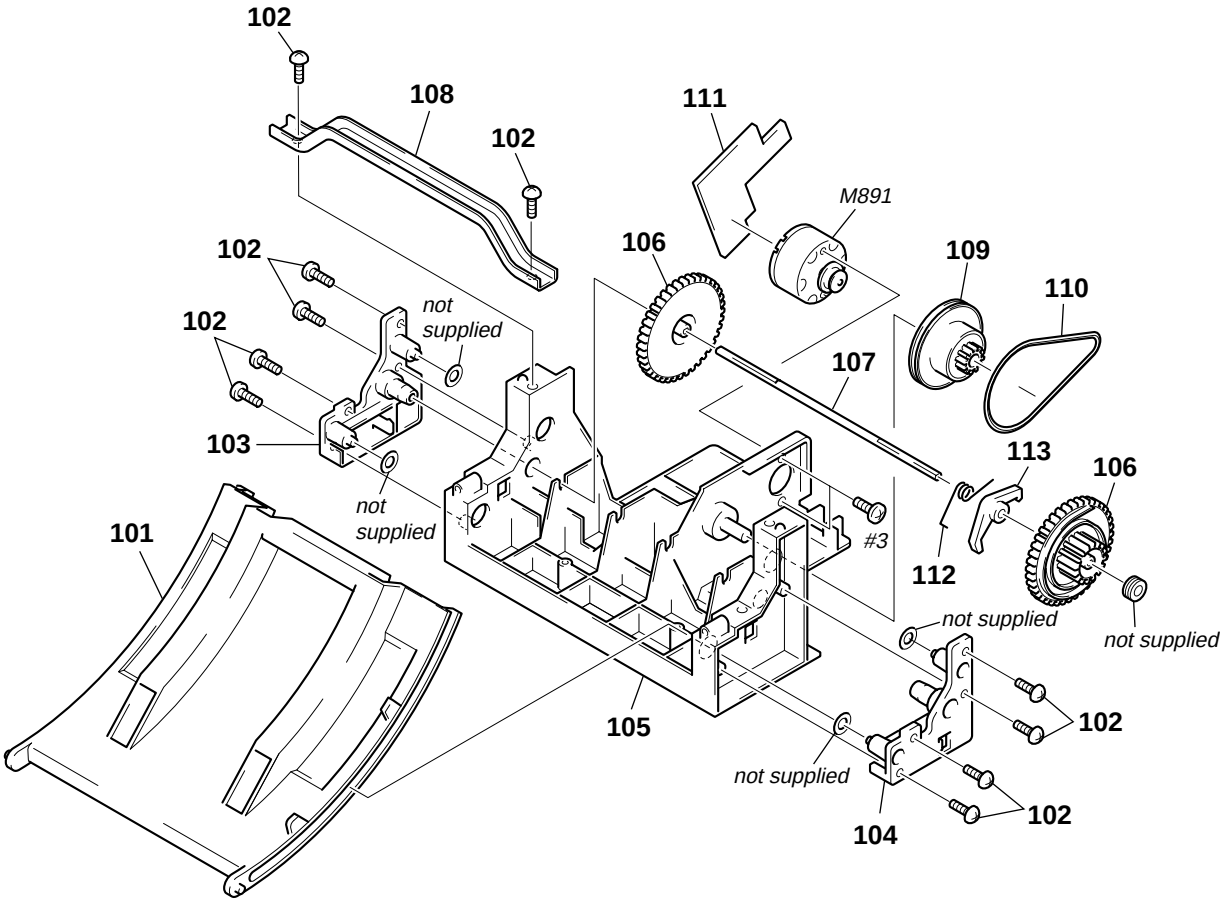

Ref. No.	Part No.	Description	Remarks	Ref. No.	Part No.	Description	Remarks
101	4-900-844-01	LEVEL SLIDER		108	4-900-864-01	BRACKET TOP	
102	4-951-620-01	SCREW (2.6 × 8), +BVTP		109	4-900-847-01	GEAR (2)	
103	X-4950-394-1	HOLDER (L) ASSY		110	3-344-059-01	BELT (L)	
104	X-4950-395-1	HOLDER (R) ASSY		* 111	1-669-965-11	MOTOR BOARD	
105	4-900-845-01	BRACKET SLIDER		112	4-212-966-01	SPRING LAVEL	
106	4-900-846-01	GEAR (1)		113	4-212-965-01	STOPPER LAVEL	
107	4-900-862-01	SHAFT CENTER		M891	A-4660-926-A	MOTOR (CDM) ASSY	

6-4. CIRCUIT BOARDS AND BACK PANEL SECTION

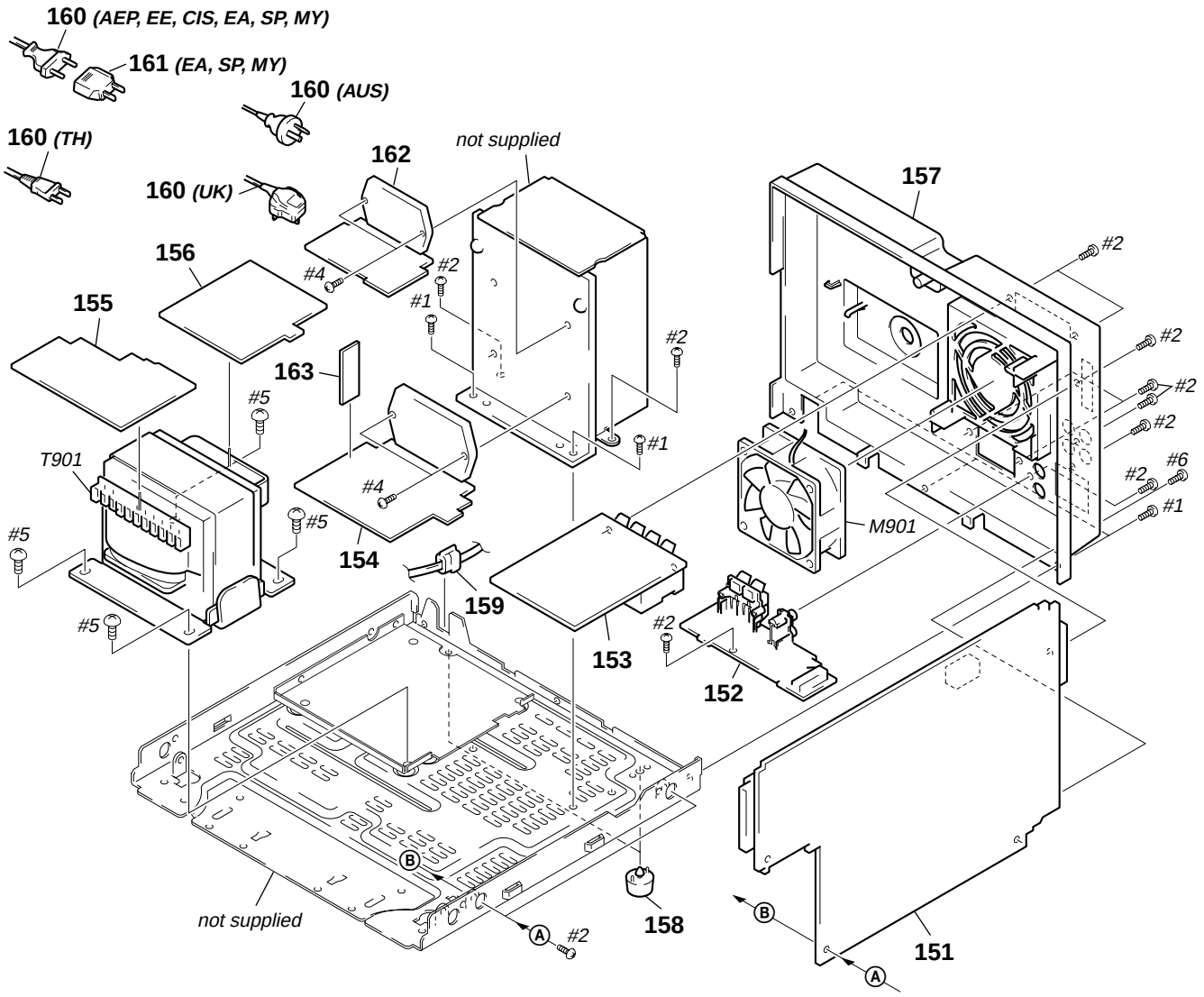

Ref. No.	Part No.	Description	Remarks
* 151	A-4414-215-A	MAIN BOARD, COMPLETE (EA, SP, MY, AUS)	
* 151	A-4414-225-A	MAIN BOARD, COMPLETE (AEP, UK, EE)	
* 151	A-4414-539-A	MAIN BOARD, COMPLETE (CIS)	
* 151	A-4414-771-A	MAIN BOARD, COMPLETE (TH)	
* 152	1-669-963-11	SURR SPK BOARD	
* 153	A-4303-596-A	TCB BOARD, COMPLETE (EE, CIS)	
* 153	A-4303-597-A	TCB BOARD, COMPLETE (AEP, UK)	
153	1-233-545-31	ENCAPSULATED COMPONENT (TCB) (TH, AUS)	
153	1-233-546-31	ENCAPSULATED COMPONENT (TCB)	(EA, SP, MY)
* 154	A-4414-221-A	POWER AMP BOARD, COMPLELE	(EA, CIS, SP, MY, AUS)
* 154	A-4414-228-A	POWER AMP BOARD, COMPLELE (AEP, UK, EE)	
* 154	A-4414-784-A	POWER AMP BOARD, COMPLELE (TH)	
* 155	1-669-954-11	SECONDARY BOARD	
* 156	1-669-953-11	PRIMARY BOARD	
* 157	4-900-848-21	BACK PANEL (EA, SP, MY)	
* 157	4-900-848-31	BACK PANEL (TH, AUS)	

Ref. No.	Part No.	Description	Remarks
* 157	4-900-848-41	BACK PANEL (AEP, UK, EE, CIS)	
158	4-970-381-11	FOOT (REAR)	
* 159	3-703-244-00	BUSHING (2104), CORD (EXCEPT TH)	
159	3-703-571-11	BUSHING (S) (4516), CORD (TH)	
⚠ 160	1-575-653-11	CORD, POWER (TH)	
⚠ 160	1-696-847-11	CORD, POWER (AUS)	
⚠ 160	1-751-520-11	CORD, POWER (UK)	
⚠ 160	1-777-071-21	CORD, POWER (AEP, EE, EA, CIS, SP, MY)	
⚠ 161	1-569-008-21	ADAPTOR, CONVERSION 2P (EA, SP, MY)	
* 162	A-4414-219-A	SURR AMP BOARD, COMPLETE	(EA, CIS, SP, MY, AUS)
* 162	A-4414-226-A	SURR AMP BOARD, COMPLETE (AEP, UK, EE)	
* 162	A-4414-775-A	SURR AMP BOARD, COMPLETE (TH)	
* 163	1-669-961-11	CONNECTOR BOARD	
M901	1-763-117-11	FAN, DC	
⚠ T901	1-431-900-11	TRANSFORMER, POWER (AEP, UK, EE, CIS)	
⚠ T901	1-431-901-11	TRANSFORMER, POWER (EA, SP, MY, TH, AUS)	

The components identified by mark ⚠ or dotted line with mark ⚠ are critical for safety.
Replace only with part number specified.

SECTION 7
ELECTRICAL PARTS LIST

CONNECTOR | DETECTOR | FRONT AV | HEADPHONE | LOADING PANEL

NOTE:
- Due to standardization, replacements in the parts list may be different from the parts specified in the diagrams or the components used on the set.
- -XX, -X mean standardized parts, so they may have some difference from the original one.
- Items marked "*" are not stocked since they are seldom required for routine service. Some delay should be anticipated when ordering these items.
- CAPACITORS:
  uF: µF
- RESISTORS
  All resistors are in ohms.
  METAL: metal-film resistor
  METAL OXIDE: Metal Oxide-film resistor
  F: nonflammable
- COILS
  uH: µH
- Abbreviation
  EE : East European
  EA : Saudi Arabia
  SP : Singapore
  MY : Malaysia
  AUS : Australian
  TH : Thai
- SEMICONDUCTORS
  In each case, u: µ, for example:
  uA...: µA... , uPA... , µPA... , uPB... , µPB... , uPC... , µPC... , uPD..., µPD...

When indicating parts by reference number, please include the board name.

The components identified by mark ⚠ or dotted line with mark ⚠ are critical for safety. Replace only with part number specified.

Ref. No.	Part No.	Description			Remarks
*	1-669-961-11	CONNECTOR BOARD			
		**********			
		< CONNECTOR >			
* CN905	1-691-174-11	CONNECTOR (BOARD TO BOARD) 4P			
CN906	1-691-161-11	PIN, CONNECTOR 4P			
**********					
*	1-669-964-11	DETECTOR BOARD			
		**********			
* CN505	1-568-941-11	PIN, CONNECTOR 3P			
		< SWITCH >			
S892	1-571-300-21	SWITCH, ROTARY (PANEL OPEN/CLOSE)			
**********					
*	1-669-957-11	FRONT AV BOARD			
		**********			
		< CAPACITOR >			
C6301	1-162-282-31	CERAMIC	100PF	10%	50V
C6302	1-162-282-31	CERAMIC	100PF	10%	50V
C6303	1-162-306-11	CERAMIC	0.01uF	20%	16V
		< CONNECTOR >			
* CN6301	1-564-520-11	PLUG, CONNECTOR 5P			
* CN6302	1-560-666-00	PIN, CONNECTOR 3P			
		< DIODE >			
D6301	8-719-911-19	DIODE 1SS119			
D6302	8-719-911-19	DIODE 1SS119			
D6303	8-719-911-19	DIODE 1SS119			
		< JACK >			
J6301	1-784-901-11	JACK, PIN 3P (AV INPUT)			
		< TRANSISTOR >			
Q6301	8-729-900-36	TRANSISTOR DTC124ES			

Ref. No.	Part No.	Description			Remarks
		< RESISTOR >			
R6301	1-249-417-11	CARBON	1K	5%	1/4W F
R6302	1-249-417-11	CARBON	1K	5%	1/4W F
R6303	1-249-441-11	CARBON	100K	5%	1/4W
R6304	1-249-441-11	CARBON	100K	5%	1/4W
R6305	1-249-425-11	CARBON	4.7K	5%	1/4W F
R6306	1-249-425-11	CARBON	4.7K	5%	1/4W F
R6307	1-249-425-11	CARBON	4.7K	5%	1/4W F
R6308	1-249-429-11	CARBON	10K	5%	1/4W
**********					
*	1-669-960-11	HEADPHONE BOARD			
		**********			
		< CAPACITOR >			
C790	1-162-306-11	CERAMIC	0.01uF	20%	16V
C791	1-162-294-31	CERAMIC	0.001uF	10%	50V
C792	1-162-294-31	CERAMIC	0.001uF	10%	50V
		< CONNECTOR >			
* CN790	1-568-944-11	PIN, CONNECTOR 6P			
		< EARTH >			
* G790	1-537-738-21	TERMINAL, EARTH			
		< JACK >			
J755	1-770-226-11	JACK (LARGE TYPE) (PHONE)			
**********					
*	1-669-959-11	LOADING PANEL BOARD			
		**********			
		< CAPACITOR >			
C626	1-124-584-00	ELECT	100uF	20%	10V
C627	1-162-306-11	CERAMIC	0.01uF	20%	16V
C628	1-162-306-11	CERAMIC	0.01uF	20%	16V
C629	1-162-306-11	CERAMIC	0.01uF	20%	16V
C630	1-162-306-11	CERAMIC	0.01uF	20%	16V
		< CONNECTOR >			
CN630	1-569-308-11	SOCKET, CONNECTOR (L TYRE) 19P			

LOADING PANEL | MAIN

Ref. No.	Part No.	Description					Remarks
		< DIODE >					
D631	8-719-046-39	DIODE	SEL5821A-TH15 (GROOVE)				
D632	8-719-046-44	DIODE	SEL5221S (REW)				
D633	8-719-058-04	DIODE	SEL5223S-TP15 (MULTI JOG STATION)				
D634	8-719-046-44	DIODE	SEL5221S (ENTER/NEXT)				
D635	8-719-046-44	DIODE	SEL5221S (EFFECT ON/OFF)				
D638	8-719-046-44	DIODE	SEL5221S (NON-STOP)				
D639	8-719-046-44	DIODE	SEL5221S (DSP DELAY)				
D640	8-719-046-44	DIODE	SEL5221S (DSP REVERB)				
D641	8-719-046-44	DIODE	SEL5221S (FF)				
D642	8-719-058-04	DIODE	SEL5223S-TP15 (MULTI JOG STATION)				
		< TRANSISTOR >					
Q531	8-729-900-80	TRANSISTOR	DTC114ES				
Q532	8-729-900-80	TRANSISTOR	DTC114ES				
Q533	8-729-900-80	TRANSISTOR	DTC114ES				
Q534	8-729-900-80	TRANSISTOR	DTC114ES				
Q535	8-729-900-80	TRANSISTOR	DTC114ES				
Q538	8-729-900-80	TRANSISTOR	DTC114ES				
Q539	8-729-900-80	TRANSISTOR	DTC114ES				
Q540	8-729-900-80	TRANSISTOR	DTC114ES				
		< RESISTOR >					
R631	1-249-410-11	CARBON	270	5%	1/4W	F	
R632	1-249-407-11	CARBON	150	5%	1/4W	F	
R633	1-249-403-11	CARBON	68	5%	1/4W	F	
R634	1-249-407-11	CARBON	150	5%	1/4W	F	
R635	1-249-413-11	CARBON	470	5%	1/4W	F	
R638	1-249-413-11	CARBON	470	5%	1/4W	F	
R639	1-249-413-11	CARBON	470	5%	1/4W	F	
R640	1-249-413-11	CARBON	470	5%	1/4W	F	
R641	1-247-807-31	CARBON	100	5%	1/4W		
R642	1-249-407-11	CARBON	150	5%	1/4W	F	
R643	1-249-409-11	CARBON	220	5%	1/4W	F	
R644	1-249-411-11	CARBON	330	5%	1/4W		
R645	1-249-411-11	CARBON	330	5%	1/4W		
R646	1-249-413-11	CARBON	470	5%	1/4W	F	
R647	1-249-415-11	CARBON	680	5%	1/4W	F	
R648	1-249-417-11	CARBON	1K	5%	1/4W	F	
R649	1-249-419-11	CARBON	1.5K	5%	1/4W	F	
R650	1-249-421-11	CARBON	2.2K	5%	1/4W	F	
R651	1-247-843-11	CARBON	3.3K	5%	1/4W		
R652	1-249-417-11	CARBON	1K	5%	1/4W	F	
R653	1-247-807-31	CARBON	100	5%	1/4W		
R654	1-249-407-11	CARBON	150	5%	1/4W	F	
R655	1-249-409-11	CARBON	220	5%	1/4W	F	
R656	1-249-411-11	CARBON	330	5%	1/4W		
R657	1-249-411-11	CARBON	330	5%	1/4W		
R658	1-249-413-11	CARBON	470	5%	1/4W	F	
R659	1-249-415-11	CARBON	680	5%	1/4W	F	
R660	1-249-429-11	CARBON	10K	5%	1/4W		
R661	1-249-429-11	CARBON	10K	5%	1/4W		
R662	1-249-429-11	CARBON	10K	5%	1/4W		
R663	1-249-429-11	CARBON	10K	5%	1/4W		
R665	1-247-843-11	CARBON	3.3K	5%	1/4W		
R666	1-247-843-11	CARBON	3.3K	5%	1/4W		
R671	1-247-807-31	CARBON	100	5%	1/4W		
R672	1-247-807-31	CARBON	100	5%	1/4W		
R673	1-247-807-31	CARBON	100	5%	1/4W		
R674	1-247-807-31	CARBON	100	5%	1/4W		
R675	1-247-807-31	CARBON	100	5%	1/4W		
R678	1-247-807-31	CARBON	100	5%	1/4W		
R679	1-247-807-31	CARBON	100	5%	1/4W		
R680	1-247-807-31	CARBON	100	5%	1/4W		
		< SWITCH >					
S631	1-762-378-11	SWITCH, TACTILE (REW)					
S632	1-762-378-11	SWITCH, TACTILE (GAME)					
S633	1-762-378-11	SWITCH, TACTILE (MUSIC)					
S634	1-762-378-11	SWITCH, TACTILE (MOVIE)					
S635	1-762-378-11	SWITCH, TACTILE (DSP DELAY)					
S636	1-762-378-11	SWITCH, TACTILE (CD REPEAT)					
S637	1-762-378-11	SWITCH, TACTILE (FLASH)					
S638	1-762-378-11	SWITCH, TACTILE (DSP REVERB)					
S639	1-762-378-11	SWITCH, TACTILE (CD PLAY MODE)					
S640	1-762-378-11	SWITCH, TACTILE (CD EDIT)					
S641	1-762-378-11	SWITCH, TACTILE (NON-STOP)					
S642	1-762-378-11	SWITCH, TACTILE (DBFB)					
S643	1-762-378-11	SWITCH, TACTILE (ENTER/NEXT)					
S644	1-762-378-11	SWITCH, TACTILE (FF)					
S645	1-762-378-11	SWITCH, TACTILE (GROOVE)					
S648	1-762-378-11	SWITCH, TACTILE (EFFECT ON/OFF)					
S649	1-762-378-11	SWITCH, TACTILE (P FILE)					
S650	1-762-378-11	SWITCH, TACTILE (PLACE)					
S651	1-762-378-11	SWITCH, TACTILE (LOOP)					
S652	1-473-392-11	ENCODER, ROTARY (VOLUME)					
S653	1-467-968-11	ENCODER, ROTARY (MULTI JOG STATION)					
**********							
*	A-4414-215-A	MAIN BOARD, COMPLETE (EA, SP, MY, AUS)					
		**********					
*	A-4414-225-A	MAIN BOARD, COMPLETE (AEP, UK, EE)					
		**********					
*	A-4414-539-A	MAIN BOARD, COMPLETE (CIS)					
		**********					
*	A-4414-771-A	MAIN BOARD, COMPLETE (TH)					
		**********					
	7-685-872-09	SCREW +BVTT 3×8 (S)					
		< CAPACITOR >					
C101	1-162-286-31	CERAMIC	220PF	10%	50V		
						(AEP, UK, EE)	
C102	1-162-286-31	CERAMIC	220PF	10%	50V		
						(AEP, UK, EE)	
C103	1-126-963-11	ELECT	4.7uF	20%	50V		
C104	1-162-286-31	CERAMIC	220PF	10%	50V		
						(AEP, UK, EE)	
C105	1-164-159-11	CERAMIC	0.1uF		50V		
C108	1-126-960-11	ELECT	1uF	20%	50V		
C111	1-136-171-00	FILM	0.33uF	5%	50V		
C112	1-136-161-00	FILM	0.047uF	5%	50V		
C113	1-164-159-11	CERAMIC	0.1uF		50V		
C114	1-130-480-00	MYLAR	0.0056uF	5%	50V		
C115	1-136-159-00	FILM	0.033uF	5%	50V		
C116	1-162-301-11	CERAMIC	0.0015uF	20%	16V		
C117	1-162-306-11	CERAMIC	0.01uF	20%	16V		
C118	1-162-290-31	CERAMIC	470PF	10%	50V		
C119	1-162-600-11	CERAMIC	0.0047uF	30%	16V		

Ref. No.	Part No.	Description			Remarks
C121	1-126-964-11	ELECT	10uF	20%	50V
C122	1-162-291-31	CERAMIC	560PF	10%	50V
C123	1-136-165-00	FILM	0.1uF	5%	50V
C124	1-136-165-00	FILM	0.1uF	5%	50V
C125	1-164-159-11	CERAMIC	0.1uF		50V
C126	1-126-964-11	ELECT	10uF	20%	50V
C127	1-104-665-11	ELECT	100uF	20%	10V
C128	1-164-159-11	CERAMIC	0.1uF		50V
C129	1-126-964-11	ELECT	10uF	20%	50V
C131	1-126-961-11	ELECT	2.2uF	20%	50V
C134	1-104-664-11	ELECT	47uF	20%	25V
C135	1-126-959-11	ELECT	0.47uF	20%	50V
C151	1-162-286-31	CERAMIC	220PF	10%	50V (AEP, UK, EE)
C152	1-162-286-31	CERAMIC	220PF	10%	50V (AEP, UK, EE)
C153	1-126-963-11	ELECT	4.7uF	20%	50V
C154	1-162-286-31	CERAMIC	220PF	10%	50V (AEP, UK, EE)
C161	1-136-171-00	FILM	0.33uF	5%	50V
C162	1-136-161-00	FILM	0.047uF	5%	50V
C163	1-164-159-11	CERAMIC	0.1uF		50V
C164	1-130-480-00	MYLAR	0.0056uF	5%	50V
C165	1-136-159-00	FILM	0.033uF	5%	50V
C166	1-162-301-11	CERAMIC	0.0015uF	20%	16V
C167	1-162-306-11	CERAMIC	0.01uF	20%	16V
C168	1-162-290-31	CERAMIC	470PF	10%	50V
C169	1-162-600-11	CERAMIC	0.0047uF	30%	16V
C171	1-126-964-11	ELECT	10uF	20%	50V
C172	1-162-291-31	CERAMIC	560PF	10%	50V
C173	1-136-165-00	FILM	0.1uF	5%	50V
C174	1-136-165-00	FILM	0.1uF	5%	50V
C175	1-136-495-11	FILM	0.068uF	5%	50V
C176	1-162-306-11	CERAMIC	0.01uF	20%	16V
C177	1-104-665-11	ELECT	100uF	20%	10V
C178	1-164-159-11	CERAMIC	0.1uF		50V
C181	1-126-961-11	ELECT	2.2uF	20%	50V
C183	1-126-960-11	ELECT	1uF	20%	50V
C184	1-162-303-11	CERAMIC	0.0033uF	30%	16V
C186	1-162-292-31	CERAMIC	680PF	10%	50V
C187	1-126-961-11	ELECT	2.2uF	20%	50V
C188	1-126-960-11	ELECT	1uF	20%	50V
C301	1-126-959-11	ELECT	0.47uF	20%	50V
C302	1-126-963-11	ELECT	4.7uF	20%	50V
C303	1-126-959-11	ELECT	0.47uF	20%	50V
C304	1-126-963-11	ELECT	4.7uF	20%	50V
C305	1-136-167-00	FILM	0.15uF	5%	50V
C306	1-126-962-11	ELECT	3.3uF	20%	50V
C307	1-136-167-00	FILM	0.15uF	5%	50V
C308	1-136-167-00	FILM	0.15uF	5%	50V
C309	1-126-962-11	ELECT	3.3uF	20%	50V
C310	1-136-167-00	FILM	0.15uF	5%	50V
C311	1-126-963-11	ELECT	4.7uF	20%	50V
C312	1-126-959-11	ELECT	0.47uF	20%	50V
C313	1-126-963-11	ELECT	4.7uF	20%	50V
C314	1-126-959-11	ELECT	0.47uF	20%	50V
C315	1-136-165-00	FILM	0.1uF	5%	50V
C316	1-136-165-00	FILM	0.1uF	5%	50V
C317	1-126-961-11	ELECT	2.2uF	20%	50V
C318	1-126-961-11	ELECT	2.2uF	20%	50V
C319	1-104-664-11	ELECT	47uF	20%	25V
C320	1-136-173-00	FILM	0.47uF	5%	50V
C321	1-161-494-00	CERAMIC	0.022uF		25V
C322	1-136-161-00	FILM	0.047uF	5%	50V
C323	1-162-292-31	CERAMIC	680PF	10%	50V
C324	1-126-934-11	ELECT	220uF	20%	10V
C325	1-136-164-00	FILM	0.082uF	5%	50V
C326	1-162-303-11	CERAMIC	0.0033uF	30%	16V
C327	1-136-164-00	FILM	0.082uF	5%	50V
C328	1-126-959-11	ELECT	0.47uF	20%	50V
C329	1-124-252-00	ELECT	0.33uF	20%	50V
C330	1-126-961-11	ELECT	2.2uF	20%	50V
C331	1-136-165-00	FILM	0.1uF	5%	50V
C332	1-126-964-11	ELECT	10uF	20%	50V
C333	1-126-961-11	ELECT	2.2uF	20%	50V
C334	1-126-964-11	ELECT	10uF	20%	50V
C335	1-136-165-00	FILM	0.1uF	5%	50V
C336	1-126-934-11	ELECT	220uF	20%	10V
C337	1-126-964-11	ELECT	10uF	20%	50V
C338	1-126-964-11	ELECT	10uF	20%	50V
C339	1-126-961-11	ELECT	2.2uF	20%	50V
C340	1-126-934-11	ELECT	220uF	20%	10V
C341	1-126-961-11	ELECT	2.2uF	20%	50V
C342	1-126-934-11	ELECT	220uF	20%	10V
C343	1-126-934-11	ELECT	220uF	20%	10V
C344	1-126-964-11	ELECT	10uF	20%	50V
C345	1-126-964-11	ELECT	10uF	20%	50V
C346	1-126-964-11	ELECT	10uF	20%	50V
C347	1-126-964-11	ELECT	10uF	20%	50V
C348	1-136-165-00	FILM	0.1uF	5%	50V
C349	1-136-165-00	FILM	0.1uF	5%	50V
C350	1-164-159-11	CERAMIC	0.1uF		50V
C351	1-164-159-11	CERAMIC	0.1uF		50V
C352	1-164-159-11	CERAMIC	0.1uF		50V
C353	1-126-960-11	ELECT	1uF	20%	50V
C354	1-126-960-11	ELECT	1uF	20%	50V
C355	1-162-210-31	CERAMIC	30PF	5%	50V
C356	1-162-210-31	CERAMIC	30PF	5%	50V
C357	1-164-159-11	CERAMIC	0.1uF		50V
C361	1-162-282-31	CERAMIC	100PF	10%	50V
C362	1-126-961-11	ELECT	2.2uF	20%	50V
C363	1-104-664-11	ELECT	47uF	20%	25V
C364	1-164-159-11	CERAMIC	0.1uF		50V
C371	1-162-282-31	CERAMIC	100PF	10%	50V
C372	1-126-961-11	ELECT	2.2uF	20%	50V
C373	1-104-664-11	ELECT	47uF	20%	25V
C374	1-164-159-11	CERAMIC	0.1uF		50V
C732	1-126-964-11	ELECT	10uF	20%	50V
C751	1-136-495-11	FILM	0.068uF	5%	50V (AEP, UK, EE)
C761	1-136-495-11	FILM	0.068uF	5%	50V (AEP, UK, EE)
C801	1-136-165-00	FILM	0.1uF	5%	50V
C802	1-136-165-00	FILM	0.1uF	5%	50V
C803	1-104-482-11	ELECT	4700uF	20%	63V

MAIN

Ref. No.	Part No.	Description			Remarks
C804	1-104-482-11	ELECT	4700uF	20%	63V
C805	1-126-948-11	ELECT	100uF	20%	35V
C806	1-126-964-11	ELECT	10uF	20%	50V
C807	1-136-165-00	FILM	0.1uF	5%	50V
C808	1-136-165-00	FILM	0.1uF	5%	50V
C809	1-126-943-11	ELECT	2200uF	20%	25V
C810	1-126-943-11	ELECT	2200uF	20%	25V
C815	1-126-940-11	ELECT	330uF	20%	25V
C816	1-126-942-61	ELECT	1000uF	20%	25V
C818	1-126-959-11	ELECT	0.47uF	20%	50V
C819	1-104-664-11	ELECT	47uF	20%	25V
C820	1-126-959-11	ELECT	0.47uF	20%	50V
C821	1-104-664-11	ELECT	47uF	20%	25V
C822	1-126-940-11	ELECT	330uF	20%	25V
C823	1-126-960-11	ELECT	1uF	20%	50V
C824	1-104-665-11	ELECT	100uF	20%	10V
C825	1-126-959-11	ELECT	0.47uF	20%	50V
C826	1-104-664-11	ELECT	47uF	20%	25V
C851	1-126-964-11	ELECT	10uF	20%	50V
C852	1-104-665-11	ELECT	100uF	20%	10V
C853	1-164-159-11	CERAMIC	0.1uF		50V
C854	1-126-961-11	ELECT	2.2uF	20%	50V
C855	1-126-934-11	ELECT	220uF	20%	10V
C856	1-104-665-11	ELECT	100uF	20%	10V
		< CONNECTOR >			
* CN101	1-764-017-21	HOUSING,CONNECTOR(PC BOARD)17P			
CN103	1-774-289-11	PIN, CONNECTOR (PC BOARD) 15P			
* CN131	1-564-507-11	PLUG, CONNECTOR 4P			
CN301	1-691-765-21	PLUG (MICRO CONNECTOR) 3P			
CN701	1-778-311-11	SOCKET, CONNECTOR (PC BOARD) 30P			
* CN731	1-569-496-11	SOCKET, CONNECTOR 10P			
CN801	1-691-773-11	PLUG (MICRO CONNECTOR) 11P			
		< DIODE >			
D101	8-719-911-19	DIODE 1SS119			
D102	8-719-911-19	DIODE 1SS119			
D131	8-719-911-19	DIODE 1SS119			
D742	8-719-024-99	DIODE 11ES2-NTA2B			
D743	8-719-911-19	DIODE 1SS119			
D746	8-719-911-19	DIODE 1SS119			
D751	8-719-911-19	DIODE 1SS119			
D752	8-719-911-19	DIODE 1SS119			
D761	8-719-911-19	DIODE 1SS119			
D781	8-719-024-99	DIODE 11ES2-NTA2B			
D801	8-719-302-38	DIODE RBV-602-01			
D802	8-719-911-19	DIODE 1SS119			
D803	8-719-911-19	DIODE 1SS119			
D804	8-719-934-22	DIODE HZS30-2L			
D805	8-719-024-99	DIODE 11ES2-NTA2B			
D806	8-719-024-99	DIODE 11ES2-NTA2B			
D807	8-719-024-99	DIODE 11ES2-NTA2B			
D808	8-719-024-99	DIODE 11ES2-NTA2B			
D810	8-719-024-99	DIODE 11ES2-NTA2B			
D811	8-719-024-99	DIODE 11ES2-NTA2B			
D812	8-719-911-19	DIODE 1SS119			
D813	8-719-024-99	DIODE 11ES2-NTA2B			
D821	8-719-024-99	DIODE 11ES2-NTA2B			
D851	8-719-911-19	DIODE 1SS119			
D852	8-719-911-19	DIODE 1SS119			
D853	8-719-911-19	DIODE 1SS119			

Ref. No.	Part No.	Description				Remarks
		< EARTH >				
* E801	1-537-738-21	TERMINAL, EARTH				
		< IC >				
IC111	8-759-495-24	IC M62442FP-TP				
IC112	8-759-000-48	IC MC14052BCP				
IC113	8-759-634-51	IC M5218AP				
IC300	8-759-526-39	IC LV1041M				
IC361	8-759-634-51	IC M5218AP				
IC801	8-759-604-86	IC M5F7807L				
IC802	8-759-604-90	IC M5F7907L				
IC803	8-759-231-53	IC TA7805S				
IC804	8-759-604-32	IC M5F7810				
IC851	8-759-111-68	IC UPC1237HA				
		< JACK >				
J101	1-580-825-11	JACK, PIN 6P (MD/VIDEO 1) (AEP, UK, EE, CIS)				
J101	1-770-613-11	JACK, PIN 4P (MD/VIDEO 1) (EA, SP, MY, TH, AUS)				
		< COIL >				
L131	1-410-521-11	INDUCTOR 100uH				
L751	1-420-872-00	COIL, AIR-CORE (AEP, UK, EE)				
L761	1-420-872-00	COIL, AIR-CORE (AEP, UK, EE)				
		< TRANSISTOR >				
Q121	8-729-422-57	TRANSISTOR UN4111				
Q132	8-729-620-05	TRANSISTOR 2SC2603-EF				
Q182	8-729-620-05	TRANSISTOR 2SC2603-EF				
Q183	8-729-141-30	TRANSISTOR 2SC3623A-LK				
Q361	8-729-141-30	TRANSISTOR 2SC3623A-LK				
Q371	8-729-141-30	TRANSISTOR 2SC3623A-LK				
Q731	8-729-140-04	TRANSISTOR 2SB1116A-L				
Q732	8-729-620-05	TRANSISTOR 2SC2603-EF				
Q741	8-729-111-29	TRANSISTOR 2SD1616A-K				
Q801	8-729-141-83	TRANSISTOR 2SB1094-LK				
Q851	8-729-900-63	TRANSISTOR DTA124ES				
Q852	8-729-900-36	TRANSISTOR DTC124ES				
Q853	8-729-900-36	TRANSISTOR DTC124ES				
		< RESISTOR >				
R101	1-249-417-11	CARBON	1K	5%	1/4W	F (AEP, UK, EE, CIS)
R102	1-249-441-11	CARBON	100K	5%	1/4W	(AEP, UK, EE, CIS)
R103	1-249-417-11	CARBON	1K	5%	1/4W	F
R104	1-249-441-11	CARBON	100K	5%	1/4W	
R105	1-249-441-11	CARBON	100K	5%	1/4W	
R106	1-249-417-11	CARBON	1K	5%	1/4W	F
R108	1-249-417-11	CARBON	1K	5%	1/4W	F
R109	1-249-441-11	CARBON	100K	5%	1/4W	
R113	1-247-903-00	CARBON	1M	5%	1/4W	
R114	1-247-903-00	CARBON	1M	5%	1/4W	
R115	1-249-433-11	CARBON	22K	5%	1/4W	
R116	1-249-419-11	CARBON	1.5K	5%	1/4W	F
R117	1-247-895-00	CARBON	470K	5%	1/4W	
R119	1-249-441-11	CARBON	100K	5%	1/4W	
R120	1-249-441-11	CARBON	100K	5%	1/4W	

Ref. No.	Part No.	Description			Remarks
R121	1-249-417-11	CARBON	1K	5%	1/4W F
R122	1-249-417-11	CARBON	1K	5%	1/4W F
R123	1-249-421-11	CARBON	2.2K	5%	1/4W F
R131	1-249-435-11	CARBON	33K	5%	1/4W
R132	1-249-421-11	CARBON	2.2K	5%	1/4W F
R134	1-249-435-11	CARBON	33K	5%	1/4W
R135	1-249-439-11	CARBON	68K	5%	1/4W
R136	1-247-883-00	CARBON	150K	5%	1/4W
R138	1-249-437-11	CARBON	47K	5%	1/4W
R139	1-247-903-00	CARBON	1M	5%	1/4W
R140	1-249-441-11	CARBON	100K	5%	1/4W
R141	1-249-417-11	CARBON	1K	5%	1/4W F
R142	1-249-437-11	CARBON	47K	5%	1/4W
R145	1-247-887-00	CARBON	220K	5%	1/4W
R151	1-249-417-11	CARBON	1K	5%	1/4W F
				(AEP, UK, EE, CIS)	
R152	1-249-441-11	CARBON	100K	5%	1/4W
				(AEP, UK, EE, CIS)	
R153	1-249-417-11	CARBON	1K	5%	1/4W F
R154	1-249-441-11	CARBON	100K	5%	1/4W
R155	1-249-441-11	CARBON	100K	5%	1/4W
R156	1-249-417-11	CARBON	1K	5%	1/4W F
R158	1-249-417-11	CARBON	1K	5%	1/4W F
R159	1-249-441-11	CARBON	100K	5%	1/4W
R163	1-247-903-00	CARBON	1M	5%	1/4W
R164	1-247-903-00	CARBON	1M	5%	1/4W
R165	1-249-433-11	CARBON	22K	5%	1/4W
R166	1-249-419-11	CARBON	1.5K	5%	1/4W F
R167	1-247-895-00	CARBON	470K	5%	1/4W
R172	1-249-429-11	CARBON	10K	5%	1/4W
R173	1-249-421-11	CARBON	2.2K	5%	1/4W F
R181	1-249-435-11	CARBON	33K	5%	1/4W
R182	1-249-421-11	CARBON	2.2K	5%	1/4W F
R184	1-249-435-11	CARBON	33K	5%	1/4W
R185	1-249-439-11	CARBON	68K	5%	1/4W
R186	1-247-883-00	CARBON	150K	5%	1/4W
R188	1-249-437-11	CARBON	47K	5%	1/4W
R189	1-249-429-11	CARBON	10K	5%	1/4W
R190	1-247-895-00	CARBON	470K	5%	1/4W
R191	1-249-417-11	CARBON	1K	5%	1/4W F
R192	1-249-437-11	CARBON	47K	5%	1/4W
R193	1-249-441-11	CARBON	100K	5%	1/4W
R194	1-249-417-11	CARBON	1K	5%	1/4W F
R195	1-249-417-11	CARBON	1K	5%	1/4W F
R196	1-249-429-11	CARBON	10K	5%	1/4W
R304	1-249-436-11	CARBON	39K	5%	1/4W
R305	1-249-433-11	CARBON	22K	5%	1/4W
R306	1-249-433-11	CARBON	22K	5%	1/4W
R307	1-249-433-11	CARBON	22K	5%	1/4W
R308	1-249-433-11	CARBON	22K	5%	1/4W
R310	1-247-903-00	CARBON	1M	5%	1/4W
R340	1-247-843-11	CARBON	3.3K	5%	1/4W
R361	1-249-417-11	CARBON	1K	5%	1/4W F
R362	1-249-441-11	CARBON	100K	5%	1/4W
R363	1-249-429-11	CARBON	10K	5%	1/4W
R364	1-249-429-11	CARBON	10K	5%	1/4W
R365	1-249-437-11	CARBON	47K	5%	1/4W

Ref. No.	Part No.	Description			Remarks
R366	1-249-421-11	CARBON	2.2K	5%	1/4W F
R367	1-249-425-11	CARBON	4.7K	5%	1/4W F
R371	1-249-417-11	CARBON	1K	5%	1/4W F
R372	1-249-441-11	CARBON	100K	5%	1/4W
R373	1-249-429-11	CARBON	10K	5%	1/4W
R374	1-249-429-11	CARBON	10K	5%	1/4W
R375	1-249-437-11	CARBON	47K	5%	1/4W
R376	1-249-421-11	CARBON	2.2K	5%	1/4W F
R377	1-249-425-11	CARBON	4.7K	5%	1/4W F
R701	1-247-807-31	CARBON	100	5%	1/4W
R702	1-247-807-31	CARBON	100	5%	1/4W
R703	1-247-807-31	CARBON	100	5%	1/4W
					(AEP, UK, EE)
R704	1-247-807-31	CARBON	100	5%	1/4W
					(AEP, UK, EE)
R705	1-247-807-31	CARBON	100	5%	1/4W
R706	1-247-807-31	CARBON	100	5%	1/4W
R707	1-247-807-31	CARBON	100	5%	1/4W
R708	1-247-807-31	CARBON	100	5%	1/4W
R709	1-247-807-31	CARBON	100	5%	1/4W
R710	1-247-807-31	CARBON	100	5%	1/4W
R711	1-247-807-31	CARBON	100	5%	1/4W
R712	1-247-807-31	CARBON	100	5%	1/4W
R713	1-247-807-31	CARBON	100	5%	1/4W
R714	1-247-807-31	CARBON	100	5%	1/4W
R715	1-247-807-31	CARBON	100	5%	1/4W
R716	1-247-807-31	CARBON	100	5%	1/4W
R717	1-247-807-31	CARBON	100	5%	1/4W
R718	1-247-807-31	CARBON	100	5%	1/4W
R731	1-249-429-11	CARBON	10K	5%	1/4W
R732	1-249-429-11	CARBON	10K	5%	1/4W
R733	1-249-425-11	CARBON	4.7K	5%	1/4W F
R742	1-249-439-11	CARBON	68K	5%	1/4W
R743	1-249-425-11	CARBON	4.7K	5%	1/4W F
R744	1-249-437-11	CARBON	47K	5%	1/4W
⚠R745	1-216-457-00	METAL OXIDE	1.2K	5%	2W F
R746	1-249-432-11	CARBON	18K	5%	1/4W
R747	1-249-437-11	CARBON	47K	5%	1/4W
R751	1-249-432-11	CARBON	18K	5%	1/4W
R752	1-249-439-11	CARBON	68K	5%	1/4W
R753	1-249-397-11	CARBON	22	5%	1/4W F
					(AEP, UK, EE)
R754	1-249-397-11	CARBON	22	5%	1/4W F
					(AEP, UK, EE)
R755	1-249-397-11	CARBON	22	5%	1/4W F
					(AEP, UK, EE)
R756	1-249-397-11	CARBON	22	5%	1/4W F
					(AEP, UK, EE)
R757	1-249-435-11	CARBON	33K	5%	1/4W
⚠R758	1-216-457-00	METAL OXIDE	1.2K	5%	2W F
					(EA, SP, MY, TH, AUS)
⚠R758	1-215-869-11	METAL OXIDE	1K	5%	1W F
					(AEP, UK, EE, CIS)
R761	1-249-432-11	CARBON	18K	5%	1/4W
R762	1-249-437-11	CARBON	47K	5%	1/4W
R763	1-249-397-11	CARBON	22	5%	1/4W F
					(AEP, UK, EE)
R764	1-249-397-11	CARBON	22	5%	1/4W F
					(AEP, UK, EE)
R765	1-249-397-11	CARBON	22	5%	1/4W F
					(AEP, UK, EE)

The components identified by mark ⚠ or dotted line with mark ⚠ are critical for safety.
Replace only with part number specified.

MAIN MIC MOTOR

Ref. No.	Part No.	Description			Remarks
R766	1-249-397-11	CARBON	22	5%	1/4W F (AEP, UK, EE)
R767	1-249-435-11	CARBON	33K	5%	1/4W
R781	1-260-100-11	CARBON	1.2K	5%	1/2W
R782	1-260-100-11	CARBON	1.2K	5%	1/2W
R783	1-260-100-11	CARBON	1.2K	5%	1/2W
R784	1-260-100-11	CARBON	1.2K	5%	1/2W
R801	1-249-431-11	CARBON	15K	5%	1/4W
R802	1-249-431-11	CARBON	15K	5%	1/4W
R803	1-249-429-11	CARBON	10K	5%	1/4W
⚠R804	1-212-982-00	FUSIBLE	100	5%	1/2W F
R851	1-249-431-11	CARBON	15K	5%	1/4W
R852	1-249-435-11	CARBON	33K	5%	1/4W
R853	1-249-429-11	CARBON	10K	5%	1/4W
R854	1-249-397-11	CARBON	22	5%	1/4W F
R855	1-249-441-11	CARBON	100K	5%	1/4W
R856	1-249-429-11	CARBON	10K	5%	1/4W
		< RELAY >			
RY741	1-515-920-11	RELAY (24V)			
RY751	1-515-920-11	RELAY (24V)			
		< TERMINAL >			
TB751	1-537-240-31	TERMINAL BOARD(CHECKER PIN)			(FRONT SPEAKER)
		< VIBRATOR >			
X301	1-579-952-21	VIBRATOR, CERAMIC 8MHz			

****

Ref. No.	Part No.	Description			Remarks
*	A-4414-202-A	MIC/ECHO BOARD, COMPLETE (EXCEPT TH)			
		**********			
*	A-4414-778-A	MIC/ECHO BOARD, COMPLETE (TH)			
		**********			
		< CAPACITOR >			
C6001	1-162-306-11	CERAMIC	0.01uF	20%	16V
C6002	1-124-257-00	ELECT	2.2uF	20%	50V
C6004	1-124-257-00	ELECT	2.2uF	20%	50V
C6005	1-162-294-31	CERAMIC	0.001uF	10%	50V
C6006	1-162-215-31	CERAMIC	47PF	5%	50V
C6007	1-162-290-31	CERAMIC	470PF	10%	50V
C6008	1-126-157-11	ELECT	10uF	20%	16V
C6009	1-124-465-00	ELECT	0.47uF	20%	50V
C6010	1-162-215-31	CERAMIC	47PF	5%	50V
C6011	1-162-282-31	CERAMIC	100PF	10%	50V
C6012	1-126-157-11	ELECT	10uF	20%	16V
C6014	1-124-257-00	ELECT	2.2uF	20%	50V
C6031	1-162-306-11	CERAMIC	0.01uF	20%	16V
		< CONNECTOR >			
CN6001	1-506-469-11	PIN, CONNECTOR 4P			
		< EARTH >			
* E6001	1-537-738-21	TERMINAL, EARTH			
		< IC >			
IC6001	8-759-634-51	IC M5218AP			
		< JACK >			
J6001	1-770-226-11	JACK (LARGE TYPE) (MIC)			
		< RESISTOR >			
R6001	1-249-429-11	CARBON	10K	5%	1/4W
R6002	1-249-417-11	CARBON	1K	5%	1/4W F
R6005	1-249-441-11	CARBON	100K	5%	1/4W
R6006	1-249-417-11	CARBON	1K	5%	1/4W F
R6007	1-249-433-11	CARBON	22K	5%	1/4W
R6008	1-249-429-11	CARBON	10K	5%	1/4W
R6009	1-247-885-00	CARBON	180K	5%	1/4W
R6010	1-247-807-31	CARBON	100	5%	1/4W
		< VARIABLE RESISTOR >			
RV6001	1-225-410-11	RES, VAR, CARBON 50K (MIC LEVEL)			

****

Ref. No.	Part No.	Description			Remarks
*	1-669-965-11	MOTOR BOARD			
		**********			
		< CAPACITOR >			
C891	1-162-306-11	CERAMIC	0.01uF	20%	16V
C892	1-124-478-11	ELECT	100uF	20%	25V
C893	1-164-159-11	CERAMIC	0.1uF		50V
		< CONNECTOR >			
* CN892	1-568-941-11	PIN, CONNECTOR 3P			
		< DIODE >			
D891	8-719-947-16	DIODE MTZJ-T-72-5.1A			
		< IC >			
IC891	8-759-822-09	IC LB1641			
		< MOTOR >			
M891	A-4660-926-A	MOTOR (CDM) ASSY			
		< RESISTOR >			
R891	1-249-425-11	CARBON	4.7K	5%	1/4W F
R892	1-249-425-11	CARBON	4.7K	5%	1/4W F
R893	1-249-429-11	CARBON	10K	5%	1/4W
R894	1-249-413-11	CARBON	470	5%	1/4W F

****

The components identified by mark ⚠ or dotted line with mark ⚠ are critical for safety.
Replace only with part number specified.

Ref. No.	Part No.	Description				Remarks
*	A-4414-223-A	PANEL BOARD, COMPLETE (SP, MY) **********				
*	A-4414-229-A	PANEL BOARD, COMPLETE (AEP, UK, EE) **********				
*	A-4414-536-A	PANEL BOARD, COMPLETE (AUS) **********				
*	A-4414-541-A	PANEL BOARD, COMPLETE (CIS) **********				
*	A-4414-786-A	PANEL BOARD, COMPLETE (TH) **********				
*	A-4417-305-A	PANEL BOARD, COMPLETE (EA) **********				
*	4-900-849-01	HOLDER (FL)				
*	4-932-810-11	CUSHION (FL)				
		< CAPACITOR >				
C501	1-162-205-31	CERAMIC	18PF	5%	50V	
C502	1-162-205-31	CERAMIC	18PF	5%	50V	
C503	1-104-905-11	CAPACITOR	0.22F		5.5V	
C505	1-164-159-11	CERAMIC	0.1uF		50V	
C506	1-164-159-11	CERAMIC	0.1uF		50V	
C507	1-164-159-11	CERAMIC	0.1uF		50V	
C508	1-164-159-11	CERAMIC	0.1uF		50V	(EXCEPT TH)
C509	1-124-589-11	ELECT	47uF	20%	16V	
C510	1-162-306-11	CERAMIC	0.01uF	20%	16V	
C513	1-162-284-31	CERAMIC	150PF	10%	50V	
C514	1-162-284-31	CERAMIC	150PF	10%	50V	
C517	1-162-303-11	CERAMIC	0.0033uF	30%	16V	
C518	1-126-157-11	ELECT	10uF	20%	16V	
C519	1-126-157-11	ELECT	10uF	20%	16V	
C520	1-126-157-11	ELECT	10uF	20%	16V	
C521	1-162-306-11	CERAMIC	0.01uF	20%	16V	
C522	1-126-157-11	ELECT	10uF	20%	16V	
C523	1-126-157-11	ELECT	10uF	20%	16V	
C601	1-126-157-11	ELECT	10uF	20%	16V	
C602	1-162-306-11	CERAMIC	0.01uF	20%	16V	
C603	1-162-294-31	CERAMIC	0.001uF	10%	50V	
C604	1-162-294-31	CERAMIC	0.001uF	10%	50V	
C605	1-126-157-11	ELECT	10uF	20%	16V	
C606	1-124-261-00	ELECT	10uF	20%	50V	
C607	1-124-261-00	ELECT	10uF	20%	50V	
C608	1-124-589-11	ELECT	47uF	20%	16V	
C609	1-162-282-31	CERAMIC	100PF	10%	50V	
C610	1-162-288-31	CERAMIC	330PF	10%	50V	
C611	1-162-288-31	CERAMIC	330PF	10%	50V	
C612	1-162-288-31	CERAMIC	330PF	10%	50V	
C613	1-162-288-31	CERAMIC	330PF	10%	50V	
C614	1-162-288-31	CERAMIC	330PF	10%	50V	
C615	1-162-288-31	CERAMIC	330PF	10%	50V	
C616	1-162-288-31	CERAMIC	330PF	10%	50V	
C617	1-162-288-31	CERAMIC	330PF	10%	50V	
C618	1-162-288-31	CERAMIC	330PF	10%	50V	
C619	1-162-288-31	CERAMIC	330PF	10%	50V	
C620	1-162-288-31	CERAMIC	330PF	10%	50V	
C621	1-162-288-31	CERAMIC	330PF	10%	50V	
C622	1-162-288-31	CERAMIC	330PF	10%	50V	
C623	1-162-288-31	CERAMIC	330PF	10%	50V	
C624	1-162-288-31	CERAMIC	330PF	10%	50V	
C625	1-162-288-31	CERAMIC	330PF	10%	50V	

Ref. No.	Part No.	Description	Remarks
		< CONNECTOR >	
* CN501	1-564-705-11	PIN, CONNECTOR (SMALL TYPE) 3P	
CN502	1-778-312-11	PLUG, CONNECTOR (PC BOARD) 30P	
CN503	1-691-650-11	SOCKET, CONNECTOR 19P	
* CN504	1-565-835-11	SOCKET, CONNECTOR 3P	
		< DIODE >	
D501	8-719-024-99	DIODE 11ES2-NTA2B	
D502	8-719-911-19	DIODE 1SS119	
D504	8-719-911-19	DIODE 1SS119	
D505	8-719-911-19	DIODE 1SS119	
D506	8-719-911-19	DIODE 1SS119	
D507	8-719-911-19	DIODE 1SS119	
D509	8-719-024-99	DIODE 11ES2-NTA2B	
D511	8-719-118-62	DIODE RD5.6F-T7B1	
D512	8-719-046-80	DIODE SML19416W-TP4 (MOVIE)	
D513	8-719-046-80	DIODE SML19416W-TP4 (MOVIE)	
D514	8-719-046-80	DIODE SML19416W-TP4 (MUSIC)	
D515	8-719-046-80	DIODE SML19416W-TP4 (MUSIC)	
D516	8-719-046-80	DIODE SML19416W-TP4 (GAME)	
D517	8-719-046-80	DIODE SML19416W-TP4 (GAME)	
D518	8-719-046-80	DIODE SML19416W-TP4 (PLACE)	
D519	8-719-046-80	DIODE SML19416W-TP4 (PLACE)	
D520	8-719-046-80	DIODE SML19416W-TP4 (P-FILE)	
D521	8-719-046-80	DIODE SML19416W-TP4 (P-FILE)	
D522	8-719-046-44	DIODE SEL5221S (AUTO)	
		< FILTER >	
FL601	1-517-775-11	INDICATOR TUBE, FLUORESCENT	
		< IC >	
IC501	8-759-563-01	IC uPD780016AYGF020-3BA	
IC502	8-759-165-82	IC PST600E-T	
IC503	8-749-011-22	IC GP1U27X	
IC504	8-719-070-85	DIODE KU381-40	
IC505	8-759-140-53	IC UPD4053BC	
IC506	8-759-495-25	IC BA3833F-E2	
IC601	8-759-261-63	IC M66004M6FP	
		< COIL >	
L501	1-408-074-00	INDUCTOR 56uH	
L502	1-410-521-11	INDUCTOR 100uH	
		< TRANSISTOR >	
Q501	8-729-620-05	TRANSISTOR 2SC2603-EF	
Q502	8-729-422-57	TRANSISTOR UN4111	
Q503	8-729-422-57	TRANSISTOR UN4111	
Q504	8-729-422-57	TRANSISTOR UN4111	
Q505	8-729-422-57	TRANSISTOR UN4111	
Q506	8-729-422-57	TRANSISTOR UN4111	
Q507	8-729-422-57	TRANSISTOR UN4111	
Q508	8-729-422-57	TRANSISTOR UN4111	
Q509	8-729-422-57	TRANSISTOR UN4111	
Q510	8-729-422-57	TRANSISTOR UN4111	
Q511	8-729-422-57	TRANSISTOR UN4111	
Q512	8-729-900-80	TRANSISTOR DTC114ES	
Q513	8-729-900-80	TRANSISTOR DTC114ES	

PANEL

Ref. No.	Part No.	Description				Remarks
		< RESISTOR >				
R501	1-247-891-00	CARBON	330K	5%	1/4W	
R502	1-249-433-11	CARBON	22K	5%	1/4W	
R503	1-249-437-11	CARBON	47K	5%	1/4W	
R504	1-249-437-11	CARBON	47K	5%	1/4W	
R505	1-249-429-11	CARBON	10K	5%	1/4W	
R506	1-249-429-11	CARBON	10K	5%	1/4W	
R507	1-249-441-11	CARBON	100K	5%	1/4W	
R511	1-249-429-11	CARBON	10K	5%	1/4W	
R512	1-249-429-11	CARBON	10K	5%	1/4W	
				(AEP, UK, EE, CIS, TH)		
R513	1-249-429-11	CARBON	10K	5%	1/4W	
						(CIS)
R514	1-249-429-11	CARBON	10K	5%	1/4W	
						(EA)
R515	1-249-429-11	CARBON	10K	5%	1/4W	
				(AEP,UK,EE,CIS,AUS)		
R516	1-249-427-11	CARBON	6.8K	5%	1/4W	F
R517	1-249-427-11	CARBON	6.8K	5%	1/4W	F
R518	1-247-807-31	CARBON	100	5%	1/4W	
R519	1-247-807-31	CARBON	100	5%	1/4W	
R520	1-247-807-31	CARBON	100	5%	1/4W	
R521	1-247-807-31	CARBON	100	5%	1/4W	
R522	1-247-807-31	CARBON	100	5%	1/4W	
R523	1-247-807-31	CARBON	100	5%	1/4W	
R524	1-247-807-31	CARBON	100	5%	1/4W	
R525	1-247-807-31	CARBON	100	5%	1/4W	
R526	1-247-807-31	CARBON	100	5%	1/4W	
R527	1-247-807-31	CARBON	100	5%	1/4W	
R528	1-247-807-31	CARBON	100	5%	1/4W	
R529	1-247-807-31	CARBON	100	5%	1/4W	
R530	1-247-807-31	CARBON	100	5%	1/4W	
R531	1-247-807-31	CARBON	100	5%	1/4W	
R532	1-247-807-31	CARBON	100	5%	1/4W	
R533	1-247-807-31	CARBON	100	5%	1/4W	
R534	1-247-807-31	CARBON	100	5%	1/4W	
R535	1-247-807-31	CARBON	100	5%	1/4W	
R536	1-247-807-31	CARBON	100	5%	1/4W	
R537	1-247-807-31	CARBON	100	5%	1/4W	
R538	1-247-807-31	CARBON	100	5%	1/4W	
R539	1-247-807-31	CARBON	100	5%	1/4W	
R540	1-247-807-31	CARBON	100	5%	1/4W	
R541	1-247-807-31	CARBON	100	5%	1/4W	
R542	1-247-807-31	CARBON	100	5%	1/4W	
R543	1-247-807-31	CARBON	100	5%	1/4W	
R544	1-247-807-31	CARBON	100	5%	1/4W	
R546	1-249-441-11	CARBON	100K	5%	1/4W	
R547	1-247-881-00	CARBON	120K	5%	1/4W	
R548	1-249-433-11	CARBON	22K	5%	1/4W	
R549	1-249-429-11	CARBON	10K	5%	1/4W	
R550	1-249-409-11	CARBON	220	5%	1/4W	F
R551	1-249-409-11	CARBON	220	5%	1/4W	F
R552	1-247-807-31	CARBON	100	5%	1/4W	
R553	1-247-807-31	CARBON	100	5%	1/4W	
R554	1-247-807-31	CARBON	100	5%	1/4W	
R555	1-247-807-31	CARBON	100	5%	1/4W	
R556	1-247-807-31	CARBON	100	5%	1/4W	
R557	1-247-807-31	CARBON	100	5%	1/4W	
R558	1-247-807-31	CARBON	100	5%	1/4W	
R559	1-247-807-31	CARBON	100	5%	1/4W	
R560	1-247-807-31	CARBON	100	5%	1/4W	
R561	1-247-807-31	CARBON	100	5%	1/4W	
R562	1-247-807-31	CARBON	100	5%	1/4W	
R563	1-247-807-31	CARBON	100	5%	1/4W	
R564	1-247-807-31	CARBON	100	5%	1/4W	
R565	1-247-807-31	CARBON	100	5%	1/4W	
R566	1-247-807-31	CARBON	100	5%	1/4W	
R567	1-247-807-31	CARBON	100	5%	1/4W	
R568	1-247-807-31	CARBON	100	5%	1/4W	
R569	1-249-407-11	CARBON	150	5%	1/4W	F
R570	1-249-409-11	CARBON	220	5%	1/4W	F
R571	1-249-411-11	CARBON	330	5%	1/4W	
R572	1-249-411-11	CARBON	330	5%	1/4W	
R573	1-249-413-11	CARBON	470	5%	1/4W	F
R574	1-249-415-11	CARBON	680	5%	1/4W	F
R575	1-249-417-11	CARBON	1K	5%	1/4W	F
R576	1-249-419-11	CARBON	1.5K	5%	1/4W	F
R577	1-249-421-11	CARBON	2.2K	5%	1/4W	F
R578	1-247-843-11	CARBON	3.3K	5%	1/4W	
R579	1-249-425-11	CARBON	4.7K	5%	1/4W	F
R580	1-249-429-11	CARBON	10K	5%	1/4W	
R581	1-249-433-11	CARBON	22K	5%	1/4W	
R582	1-249-439-11	CARBON	68K	5%	1/4W	
R583	1-247-807-31	CARBON	100	5%	1/4W	
R584	1-249-407-11	CARBON	150	5%	1/4W	F
R585	1-249-409-11	CARBON	220	5%	1/4W	F
R586	1-249-411-11	CARBON	330	5%	1/4W	
R587	1-249-411-11	CARBON	330	5%	1/4W	
R588	1-249-413-11	CARBON	470	5%	1/4W	F
R589	1-249-415-11	CARBON	680	5%	1/4W	F
R590	1-249-417-11	CARBON	1K	5%	1/4W	F
R591	1-249-419-11	CARBON	1.5K	5%	1/4W	F
R592	1-249-421-11	CARBON	2.2K	5%	1/4W	F
R593	1-247-843-11	CARBON	3.3K	5%	1/4W	
R594	1-249-425-11	CARBON	4.7K	5%	1/4W	F
R595	1-249-429-11	CARBON	10K	5%	1/4W	
R596	1-249-433-11	CARBON	22K	5%	1/4W	
R597	1-249-403-11	CARBON	68	5%	1/4W	F
R598	1-249-403-11	CARBON	68	5%	1/4W	F
R599	1-249-403-11	CARBON	68	5%	1/4W	F
R600	1-249-403-11	CARBON	68	5%	1/4W	F
R601	1-249-403-11	CARBON	68	5%	1/4W	F
R602	1-249-403-11	CARBON	68	5%	1/4W	F
R603	1-249-403-11	CARBON	68	5%	1/4W	F
R604	1-249-403-11	CARBON	68	5%	1/4W	F
R605	1-249-403-11	CARBON	68	5%	1/4W	F
R606	1-249-403-11	CARBON	68	5%	1/4W	F
R607	1-249-415-11	CARBON	680	5%	1/4W	F
R608	1-247-807-31	CARBON	100	5%	1/4W	
R614	1-249-434-11	CARBON	27K	5%	1/4W	
R615	1-249-429-11	CARBON	10K	5%	1/4W	
R616	1-249-429-11	CARBON	10K	5%	1/4W	
R617	1-249-417-11	CARBON	1K	5%	1/4W	F
R618	1-247-843-11	CARBON	3.3K	5%	1/4W	
R619	1-249-437-11	CARBON	47K	5%	1/4W	
R621	1-247-843-11	CARBON	3.3K	5%	1/4W	
R622	1-247-843-11	CARBON	3.3K	5%	1/4W	
R623	1-249-425-11	CARBON	4.7K	5%	1/4W	F

Ref. No.	Part No.	Description			Remarks
		< SWITCH >			
S501	1-762-378-11	SWITCH, TACTILE (EQ 16kHz +)			
S502	1-762-378-11	SWITCH, TACTILE (NAME IN)			
S503	1-762-378-11	SWITCH, TACTILE (CHAR)			
S504	1-762-378-11	SWITCH, TACTILE (EQ MEMORY)			
S505	1-762-378-11	SWITCH, TACTILE (OPEN/CLOSE)			
S506	1-762-378-11	SWITCH, TACTILE (TUNER BAND)			
S507	1-762-378-11	SWITCH, TACTILE (STEREO/MONO)			
S508	1-762-378-11	SWITCH, TACTILE (MEMORY)			
S509	1-762-378-11	SWITCH, TACTILE (KARAOKE PONMPX)			
S510	1-762-378-11	SWITCH, TACTILE (OPEN SENSOR ON/OFF)			
S511	1-762-378-11	SWITCH, TACTILE (INSERT)			
S512	1-762-378-11	SWITCH, TACTILE (DELETE)			
S513	1-762-378-11	SWITCH, TACTILE (EQ 16kHz –)			
S514	1-762-378-11	SWITCH, TACTILE (FUNCTION)			
S515	1-762-378-11	SWITCH, TACTILE (TIMER SELECT)			
S516	1-762-378-11	SWITCH, TACTILE (CLOCK/TIMER SELECT)			
S517	1-762-378-11	SWITCH, TACTILE (POWER)			
S518	1-762-378-11	SWITCH, TACTILE (DIPLAY)			
S519	1-762-378-11	SWITCH, TACTILE (PTY) (AEP, UK, EE)			
S520	1-762-378-11	SWITCH, TACTILE (SURROUND +)			
S521	1-762-378-11	SWITCH, TACTILE (SURROUND –)			
S522	1-762-378-11	SWITCH, TACTILE (DBFB –)			
S523	1-762-378-11	SWITCH, TACTILE (DBFB +)			
S524	1-762-378-11	SWITCH, TACTILE (EQ 63Hz +)			
S525	1-762-378-11	SWITCH, TACTILE (EQ 63Hz –)			
S526	1-762-378-11	SWITCH, TACTILE (EQ 250Hz –)			
S527	1-762-378-11	SWITCH, TACTILE (EQ 250Hz +)			
S528	1-762-378-11	SWITCH, TACTILE (EQ 1kHz +)			
S529	1-762-378-11	SWITCH, TACTILE (EQ 1kHz –)			
S530	1-762-378-11	SWITCH, TACTILE (EQ 4kHz –)			
S531	1-762-378-11	SWITCH, TACTILE (EQ 4kHz +)			
		< VIBRATOR >			
X501	1-760-489-11	VIBRATOR, CERAMIC 5MHz			
X502	1-567-098-41	VIBRATOR, CRYSTAL 32kHz			
**********					
*	A-4414-221-A	POWER AMP BOARD, COMPLETE **********			(EA, CIS, SP, MY, AUS)
*	A-4414-228-A	POWER AMP BOARD, COMPLETE (AEP, UK, EE) **********			
*	A-4414-784-A	POWER AMP BOARD, COMPLETE (TH) **********			
		< CAPACITOR >			
C811	1-136-165-00	FILM	0.1uF	5%	50V
C812	1-136-165-00	FILM	0.1uF	5%	50V
C813	1-126-974-11	ELECT	3300uF	20%	50V
C814	1-126-974-11	ELECT	3300uF	20%	50V
C901	1-126-963-11	ELECT	4.7uF	20%	50V
C902	1-162-294-31	CERAMIC	0.001uF	10%	50V
C903	1-162-282-31	CERAMIC	100PF	10%	50V
C904	1-126-967-11	ELECT	47uF	20%	50V
C905	1-126-967-11	ELECT	47uF	20%	50V
C906	1-136-495-11	FILM	0.068uF	5%	50V
C907	1-136-495-11	FILM	0.068uF	5%	50V
C932	1-128-552-51	ELECT	47uF	20%	63V
C933	1-128-581-11	ELECT	4.7uF	20%	63V
C934	1-128-552-51	ELECT	47uF	20%	63V
C936	1-162-282-31	CERAMIC	100PF	10%	50V (EXCEPT TH)
C937	1-126-965-11	ELECT	22uF	20%	50V
C938	1-126-934-11	ELECT	220uF	20%	16V
C940	1-128-581-11	ELECT	4.7uF	20%	63V
C950	1-162-306-11	CERAMIC	0.01uF	20%	16V (TH)
C951	1-126-963-11	ELECT	4.7uF	20%	50V
C952	1-162-294-31	CERAMIC	0.001uF	10%	50V
C953	1-162-282-31	CERAMIC	100PF	10%	50V
C954	1-126-967-11	ELECT	47uF	20%	50V
C955	1-126-967-11	ELECT	47uF	20%	50V
C956	1-136-495-11	FILM	0.068uF	5%	50V
C957	1-136-495-11	FILM	0.068uF	5%	50V
		< CONNECTOR >			
CN902	1-691-770-11	PLUG (MICRO CONNECTOR) 8P			
CN904	1-691-161-11	PIN, CONNECTOR 4P			
		< DIODE >			
D809	8-719-028-23	DIODE D3SBA20-4101			
D903	8-719-911-19	DIODE 1SS119			
D941	8-719-911-19	DIODE 1SS119 (EA, CIS, SP, MY, AUS)			
D953	8-719-911-19	DIODE 1SS119			
		< IC >			
IC901	8-749-921-04	IC STK-4211MK-2 (AEP,UK,EE)			
IC901	8-749-921-68	IC STK-4231MK2 (EA,CIS,SP,MY,AUS)			
IC901	8-749-922-65	IC STK-4221MK2 (TH)			
		< TRANSISTOR >			
Q131	8-729-141-30	TRANSISTOR 2SC3623A-LK			
Q181	8-729-141-30	TRANSISTOR 2SC3623A-LK			
Q901	8-729-900-36	TRANSISTOR DTC124ES			
Q902	8-729-140-84	TRANSISTOR 2SC1841-PAFAEA			
Q952	8-729-140-84	TRANSISTOR 2SC1841-PAFAEA			
Q971	8-729-900-36	TRANSISTOR DTC124ES			
Q972	8-729-119-78	TRANSISTOR 2SC403SP-51			
		< RESISTOR >			
R133	1-249-425-11	CARBON	4.7K	5%	1/4W F
R183	1-249-425-11	CARBON	4.7K	5%	1/4W F
R901	1-249-417-11	CARBON	1K	5%	1/4W F
R902	1-249-437-11	CARBON	47K	5%	1/4W
R903	1-249-412-11	CARBON	390	5%	1/4W F (AEP, UK, EE, TH)
R903	1-249-413-11	CARBON	470	5%	1/4W F (EA, CIS, SP, MY, AUS)
R904	1-249-437-11	CARBON	47K	5%	1/4W
R906	1-249-429-11	CARBON	10K	5%	1/4W
R907	1-249-429-11	CARBON	10K	5%	1/4W
R908	1-249-429-11	CARBON	10K	5%	1/4W

POWER AMP | PRIMARY | SECONDARY | SURR AMP

Ref. No.	Part No.	Description			Remarks
R909	1-249-429-11	CARBON	10K	5%	1/4W
R910	1-249-397-11	CARBON	22	5%	1/4W F
R911	1-249-397-11	CARBON	22	5%	1/4W F
R913	1-249-417-11	CARBON	1K	5%	1/4W F
R914	1-249-431-11	CARBON	15K	5%	1/4W
R915	1-249-441-11	CARBON	100K	5%	1/4W
⚠R920	1-220-893-11	METAL	0.22	10%	5W
⚠R932	1-212-881-11	FUSIBLE	100	5%	1/4W F
R933	1-249-421-11	CARBON	2.2K	5%	1/4W F
R934	1-249-421-11	CARBON	2.2K	5%	1/4W F
R935	1-249-421-11	CARBON	2.2K	5%	1/4W F
R936	1-249-421-11	CARBON	2.2K	5%	1/4W F
R937	1-249-429-11	CARBON	10K	5%	1/4W
R938	1-247-885-00	CARBON	180K	5%	1/4W
R940	1-249-429-11	CARBON	10K	5%	1/4W
R941	1-249-429-11	CARBON	10K	5%	1/4W
R942	1-249-413-11	CARBON	470	5%	1/4W F
⚠R943	1-212-881-11	FUSIBLE	100	5%	1/4W F
R945	1-249-417-11	CARBON	1K	5%	1/4W F
R951	1-249-417-11	CARBON	1K	5%	1/4W F
R952	1-249-437-11	CARBON	47K	5%	1/4W
R953	1-249-412-11	CARBON	390	5%	1/4W F (AEP, UK, EE, TH)
R953	1-249-413-11	CARBON	470	5%	1/4W F (EA, CIS, SP, MY, AUS)
R954	1-249-437-11	CARBON	47K	5%	1/4W
R956	1-249-429-11	CARBON	10K	5%	1/4W
R957	1-249-429-11	CARBON	10K	5%	1/4W
R958	1-249-429-11	CARBON	10K	5%	1/4W
R959	1-249-429-11	CARBON	10K	5%	1/4W
R960	1-249-397-11	CARBON	22	5%	1/4W F
R961	1-249-397-11	CARBON	22	5%	1/4W F
R963	1-249-417-11	CARBON	1K	5%	1/4W F
R964	1-249-431-11	CARBON	15K	5%	1/4W
R965	1-249-441-11	CARBON	100K	5%	1/4W
⚠R970	1-220-893-11	METAL	0.22	10%	5W
R971	1-249-441-11	CARBON	100K	5%	1/4W
R972	1-247-885-00	CARBON	180K	5%	1/4W
R973	1-249-441-11	CARBON	100K	5%	1/4W
⚠R974	1-212-849-00	FUSIBLE	4.7	5%	1/4W F
		< THERMISTOR(POSITIVE) >			
THP901	1-807-796-11	THERMISTOR			

****

*	1-669-953-11	PRIMARY BOARD
		**********
	1-533-293-11	FUSE HOLDER
		< CONNECTOR >
CN871	1-564-321-00	PIN, CONNECTOR 2P
		< FUSE >
⚠F873	1-532-506-51	FUSE TIME LAG 6.3A (EA, SP, MY)
		< SWITCH >
⚠S871	1-771-291-11	SWITCH, POWER (VOLTAGE SELECTOR) (EA, SP, MY)

****

Ref. No.	Part No.	Description	Remarks
*	1-669-954-11	SECONDARY BOARD	
		**********	
	1-533-293-11	FUSE HOLDER	
		< FUSE >	
⚠F874	1-532-506-51	FUSE TIME LAG 6.3A 250V	
⚠F875	1-532-506-51	FUSE TIME LAG 6.3A 250V	
⚠F876	1-532-505-51	FUSE TIME LAG 5A 250V	
⚠F877	1-532-505-51	FUSE TIME LAG 5A 250V	
		< CONNECTOR >	
* CN872	1-564-518-11	PLUG, CONNECTOR 3P	
		< RESISTOR >	
⚠R871	1-219-119-81	FUSIBLE 0.1 5% 1/4W F	
⚠R872	1-219-119-81	FUSIBLE 0.1 5% 1/4W F	
⚠R873	1-219-120-11	FUSIBLE 0.15 5% 1/4W F	
⚠R874	1-219-120-11	FUSIBLE 0.15 5% 1/4W F	

****

*	A-4414-219-A	SURR AMP BOARD, COMPLETE (EA, CIS, SP, MY, AUS)
		**********
*	A-4414-226-A	SURR AMP BOARD, COMPLETE (AEP, UK, EE)
		**********
*	A-4414-775-A	SURR AMP BOARD, COMPLETE (TH)
		**********
		< CAPACITOR >

C4000	1-162-306-11	CERAMIC	0.01uF	20%	16V
C4001	1-126-961-11	ELECT	2.2uF	20%	50V
C4002	1-162-294-31	CERAMIC	0.001uF	10%	50V
C4003	1-162-282-31	CERAMIC	100PF	10%	50V
C4004	1-126-964-11	ELECT	10uF	20%	50V
C4005	1-126-964-11	ELECT	10uF	20%	50V
C4006	1-136-165-00	FILM	0.1uF	5%	50V
C4007	1-136-165-00	FILM	0.1uF	5%	50V
C4010	1-126-967-11	ELECT	47uF	20%	50V
C4011	1-126-963-11	ELECT	4.7uF	20%	50V
C4012	1-126-965-11	ELECT	22uF	20%	50V
C4013	1-126-967-11	ELECT	47uF	20%	50V
C4040	1-126-963-11	ELECT	4.7uF	20%	50V
C4051	1-126-961-11	ELECT	2.2uF	20%	50V
C4052	1-162-294-31	CERAMIC	0.001uF	10%	50V
C4053	1-162-282-31	CERAMIC	100PF	10%	50V
C4054	1-126-964-11	ELECT	10uF	20%	50V
C4055	1-126-964-11	ELECT	10uF	20%	50V
C4056	1-136-165-00	FILM	0.1uF	5%	50V
C4057	1-136-165-00	FILM	0.1uF	5%	50V

< CONNECTOR >

* CN4002	1-564-519-11	PLUG, CONNECTOR 4P
* CN4003	1-691-174-11	CONNECTOR (BOARD TO BOARD) 4P

< DIODE >

D4003	8-719-911-19	DIODE 1SS119
D4053	8-719-911-19	DIODE 1SS119

The components identified by mark ⚠ or dotted line with mark ⚠ are critical for safety.
Replace only with part number specified.

Ref. No.	Part No.	Description				Remarks
		< IC >				
IC4001	8-749-900-96	IC STK-4142MK2				
		< TRANSISTOR >				
Q4002	8-729-140-84	TRANSISTOR 2SC1841-PAFAEA				
Q4052	8-729-140-84	TRANSISTOR 2SC1841-PAFAEA				
		< RESISTOR >				
R4001	1-249-417-11	CARBON	1K	5%	1/4W	F
R4002	1-249-437-11	CARBON	47K	5%	1/4W	
R4003	1-249-413-11	CARBON	470	5%	1/4W	F
R4004	1-249-437-11	CARBON	47K	5%	1/4W	
R4006	1-249-425-11	CARBON	4.7K	5%	1/4W	F
R4007	1-249-425-11	CARBON	4.7K	5%	1/4W	F
R4008	1-249-425-11	CARBON	4.7K	5%	1/4W	F
R4009	1-249-425-11	CARBON	4.7K	5%	1/4W	F
R4010	1-249-397-11	CARBON	22	5%	1/4W	F
R4011	1-249-397-11	CARBON	22	5%	1/4W	F
R4013	1-249-417-11	CARBON	1K	5%	1/4W	F
R4014	1-249-431-11	CARBON	15K	5%	1/4W	
R4015	1-249-441-11	CARBON	100K	5%	1/4W	
⚠R4020	1-220-755-11	METAL	0.22	10%	2W	
⚠R4021	1-217-641-00	FUSIBLE	4.7	5%	1/4W	F
⚠R4032	1-212-881-11	FUSIBLE	100	5%	1/4W	F
R4033	1-249-421-11	CARBON	2.2K	5%	1/4W	F
R4034	1-249-421-11	CARBON	2.2K	5%	1/4W	F
R4035	1-249-421-11	CARBON	2.2K	5%	1/4W	F
R4036	1-249-421-11	CARBON	2.2K	5%	1/4W	F
⚠R4043	1-212-881-11	FUSIBLE	100	5%	1/4W	F
R4051	1-249-417-11	CARBON	1K	5%	1/4W	F
R4052	1-249-437-11	CARBON	47K	5%	1/4W	
R4053	1-249-413-11	CARBON	470	5%	1/4W	F
R4054	1-249-437-11	CARBON	47K	5%	1/4W	
R4056	1-249-425-11	CARBON	4.7K	5%	1/4W	F
R4057	1-249-425-11	CARBON	4.7K	5%	1/4W	F
R4058	1-249-425-11	CARBON	4.7K	5%	1/4W	F
R4059	1-249-425-11	CARBON	4.7K	5%	1/4W	F
R4060	1-249-397-11	CARBON	22	5%	1/4W	F
R4061	1-249-397-11	CARBON	22	5%	1/4W	F
R4063	1-249-417-11	CARBON	1K	5%	1/4W	F
R4064	1-249-431-11	CARBON	15K	5%	1/4W	
R4065	1-249-441-11	CARBON	100K	5%	1/4W	
⚠R4070	1-220-755-11	METAL	0.22	10%	2W	

****

Ref. No.	Part No.	Description				Remarks
*	1-669-963-11	SURR SPK BOARD				
		**********				
		< CAPACITOR >				
C201	1-136-495-11	FILM	0.068uF	5%	50V	(AEP, UK, EE)
C202	1-104-666-11	ELECT	220uF	20%	25V	
C203	1-162-306-11	CERAMIC	0.01uF	20%	16V	
C221	1-136-495-11	FILM	0.068uF	5%	50V	(AEP, UK, EE)
		< CONNECTOR >				
* CN201	1-569-505-11	PIN, CONNECTOR 10P				
CN202	1-564-506-11	PLUG, CONNECTOR 3P				
CN781	1-506-468-11	PIN, CONNECTOR 3P				
		< DIODE >				
D201	8-719-024-99	DIODE 11ES2-NTA2B				
D782	8-719-911-19	DIODE 1SS119				
		< EARTH >				
* E781	4-870-539-11	PLATE, GROUND				
		< JACK >				
J781	1-785-011-11	JACK, PIN 2P				
		< COIL >				
L201	1-420-872-00	COIL, AIR-CORE (AEP, UK, EE)				
L221	1-420-872-00	COIL, AIR-CORE (AEP, UK, EE)				
		< RESISTOR >				
R201	1-249-397-11	CARBON	22	5%	1/4W	F (AEP, UK, EE)
R202	1-249-397-11	CARBON	22	5%	1/4W	F (AEP, UK, EE)
R203	1-249-393-11	CARBON	10	5%	1/4W	F (AEP, UK, EE)
R221	1-249-397-11	CARBON	22	5%	1/4W	F (AEP, UK, EE)
R222	1-249-397-11	CARBON	22	5%	1/4W	F (AEP, UK, EE)
R223	1-249-393-11	CARBON	10	5%	1/4W	F (AEP, UK, EE)
		< RELAY >				
RY781	1-515-622-11	RELAY				
		< TERMINAL >				
TB201	1-537-923-11	TERMINAL BOARD (6P) (REAR SPEAKER)				

****

Ref. No.	Part No.	Description				Remarks
*	A-4303-596-A	TCB BOARD, COMPLETE (EE, CIS)				
		**********				
		< CAPACITOR >				
C1	1-163-141-00	CERAMIC CHIP	0.001uF	5%	50V	
C2	1-126-967-11	ELECT	47uF	20%	16V	
C3	1-163-038-91	CERAMIC CHIP	0.1uF		25V	
C5	1-163-031-11	CERAMIC CHIP	0.01uF		50V	
C6	1-163-038-91	CERAMIC CHIP	0.1uF		25V	
C7	1-101-004-00	CERAMIC	0.01uF		50V	
C8	1-163-031-11	CERAMIC CHIP	0.01uF		50V	
C9	1-163-031-11	CERAMIC CHIP	0.01uF		50V	
C10	1-162-306-11	CERAMIC CHIP	0.01uF	30%	16V	
C16	1-163-038-91	CERAMIC CHIP	0.1uF		25V	

The components identified by mark ⚠ or dotted line with mark ⚠ are critical for safety.
Replace only with part number specified.

TCB

Ref. No.	Part No.	Description			Remarks
C19	1-163-249-11	CERAMIC CHIP	82PF	5%	50V
C21	1-163-141-00	CERAMIC CHIP	0.001uF	5%	50V
C22	1-163-031-11	CERAMIC CHIP	0.01uF		50V
C23	1-163-235-11	CERAMIC CHIP	22PF	5%	50V
C24	1-163-239-11	CERAMIC CHIP	33PF	5%	50V
C26	1-126-967-11	ELECT	47uF	20%	16V
C28	1-126-967-11	ELECT	47uF	20%	16V
C29	1-162-306-11	CERAMIC	0.01uF	30%	16V
C30	1-126-961-11	ELECT	2.2uF	20%	50V
C31	1-163-031-11	CERAMIC CHIP	0.01uF		50V
C32	1-163-038-91	CERAMIC CHIP	0.1uF		25V
C33	1-163-038-91	CERAMIC CHIP	0.1uF		25V
C34	1-163-229-11	CERAMIC CHIP	12PF	5%	50V
C35	1-163-038-91	CERAMIC CHIP	0.1uF		25V
C36	1-163-141-00	CERAMIC CHIP	0.001uF	5%	50V
C37	1-163-141-00	CERAMIC CHIP	0.001uF	5%	50V
C39	1-163-141-00	CERAMIC CHIP	0.001uF	5%	50V
C40	1-126-967-11	ELECT	47uF	20%	16V
C41	1-163-031-11	CERAMIC CHIP	0.01uF		50V
C42	1-163-038-91	CERAMIC CHIP	0.1uF		25V
C43	1-163-031-91	CERAMIC CHIP	0.01uF		50V
C44	1-163-038-91	CERAMIC CHIP	0.1uF		25V
C45	1-163-077-00	CERAMIC CHIP	0.1uF		50V
C46	1-126-967-11	ELECT	47uF	20%	16V
C47	1-126-301-11	ELECT	1.0uF	20%	50V
C48	1-163-059-00	CERAMIC CHIP	0.01uF		50V
C49	1-126-964-11	ELECT	10uF	20%	50V
C50	1-126-960-11	ELECT	1.0uF	20%	50V
C51	1-126-959-11	ELECT	0.47uF	20%	50V
C52	1-126-960-11	ELECT	1.0uF	20%	50V
C53	1-126-964-11	ELECT	10uF	20%	50V
C54	1-104-396-11	ELECT	10uF	20%	16V
C55	1-104-396-11	ELECT	10uF	20%	16V
C56	1-104-396-11	ELECT	10uF	20%	16V
C57	1-163-017-00	CERAMIC CHIP	0.0047uF	10%	50V
C58	1-163-017-00	CERAMIC CHIP	0.0047uF	10%	50V
C59	1-163-989-11	CERAMIC CHIP	0.033uF	10%	25V
C60	1-163-989-11	CERAMIC CHIP	0.033uF	10%	25V
C61	1-126-301-11	ELECT	1.0uF	20%	50V
C62	1-163-031-11	CERAMIC CHIP	0.01uF		50V
C63	1-163-139-00	CERAMIC CHIP	820PF	5%	50V
C65	1-126-967-11	ELECT	47uF	20%	16V
C66	1-163-031-11	CERAMIC CHIP	0.01uF		50V
C67	1-126-162-11	ELECT	3.3uF	20%	50V
C68	1-163-031-11	CERAMIC	0.01uF		50V
C69	1-126-967-11	ELECT	47uF	20%	16V
C71	1-162-306-11	CERAMIC	0.01uF	30%	16V
C72	1-126-967-11	ELECT	47uF	20%	16V
C73	1-163-031-11	CERAMIC CHIP	0.01uF		50V
C74	1-163-031-11	CERAMIC CHIP	0.01uF		50V
C1701	1-162-294-31	CERAMIC CHIP	0.001uF	10%	50V
C1702	1-130-014-00	FILM	470PF	5%	50V
C1703	1-126-959-11	ELECT	0.47uF	20%	50V
C1704	1-126-959-11	ELECT	0.47uF	20%	50V
C1705	1-163-035-00	CERAMIC CHIP	0.047uF		50V
C1706	1-126-960-11	ELECT	1.0uF	20%	50V
C1707	1-163-129-00	CERAMIC CHIP	330PF	5%	50V
C1710	1-163-141-00	CERAMIC CHIP	0.001uF	5%	50V
C1711	1-163-141-00	CERAMIC CHIP	0.001uF	5%	50V
C1712	1-130-736-11	FILM	0.01uF	5%	50V
C1713	1-130-736-11	FILM	0.01uF	5%	50V
C1714	1-126-960-11	ELECT	1.0uF	20%	50V
C1715	1-126-960-11	ELECT	1.0uF	20%	50V
C1716	1-126-960-11	ELECT	1.0uF	20%	50V
C1719	1-126-967-11	ELECT	47uF	20%	16V
C1720	1-163-031-11	CERAMIC CHIP	0.01uF		50V
C1723	1-163-031-11	CERAMIC CHIP	0.01uF		50V
C1724	1-163-031-11	CERAMIC CHIP	0.01uF		50V
C1725	1-126-967-11	ELECT	47uF	20%	16V
C1726	1-126-960-11	ELECT	1.0uF	20%	50V
C1727	1-126-960-11	ELECT	1.0uF	20%	50V
C1728	1-126-966-11	ELECT	33uF	20%	16V
		< FILTER >			
CF1	1-567-389-11	FILTER, CERAMIC			
CF3	1-567-389-11	FILTER, CERAMIC			
		< CONNECTOR >			
CN1	1-774-292-21	HOUSING, CONNECTOR (PC BOARD) 15P			
		< TRIMMER >			
CT1701	1-141-444-11	CAP, CERAMIC TRIMMER 50PF			
		< DIODE >			
D21	8-719-976-99	DIODE DTZ5.1B			
D41	8-719-016-74	DIODE 1SS352			
D42	8-719-016-74	DIODE 1SS352			
D43	8-719-016-74	DIODE 1SS352			
D1701	8-719-016-74	DIODE 1SS352			
D1702	8-719-016-74	DIODE 1SS352			
D1703	8-719-911-19	DIODE 1SS119-25			
D1704	8-719-016-74	DIODE 1SS352			
		< FRONTEND >			
FE1	1-693-335-11	FRONT END (3 GANG)			
FE2	1-233-514-11	ENCAPSULATED COMPONENT			
		< IC >			
IC21	8-759-288-54	IC LC72130			
IC41	8-759-495-82	IC LA1838			
IC1701	8-759-063-04	IC IR3R42			
IC1702	8-759-140-53	IC uPD4053BC			
		< IFT >			
IFT41	1-409-636-11	TRANSFORMER, IF (CERAMIC FILTER)			
		< JUMPER RESISTOR >			
JR2	1-216-295-91	METAL CHIP	0	5%	1/10W
JR6	1-216-295-91	METAL CHIP	0	5%	1/10W
JR8	1-216-295-91	METAL CHIP	0	5%	1/10W
JR9	1-216-295-91	METAL CHIP	0	5%	1/10W
JR12	1-216-296-91	METAL CHIP	0	5%	1/8W
JR46	1-216-296-91	METAL CHIP	0	5%	1/8W
JR47	1-216-295-91	METAL CHIP	0	5%	1/10W
JR48	1-216-295-91	METAL CHIP	0	5%	1/10W
JR49	1-216-296-91	METAL CHIP	0	5%	1/8W
JR51	1-216-295-91	METAL CHIP	0	5%	1/10W

Ref. No.	Part No.	Description			Remarks
JR52	1-216-295-91	METAL CHIP	0	5%	1/10W
JR53	1-216-296-91	METAL CHIP	0	5%	1/8W
JR54	1-216-295-91	METAL CHIP	0	5%	1/10W
JR1701	1-216-295-91	METAL CHIP	0	5%	1/10W
JR1702	1-216-295-91	METAL CHIP	0	5%	1/10W
JR1703	1-216-295-91	METAL CHIP	0	5%	1/10W
JR1704	1-216-295-91	METAL CHIP	0	5%	1/10W
JR1705	1-216-295-91	METAL CHIP	0	5%	1/10W
		< COIL >			
L3	1-410-521-11	MICRO INDUCTOR	100uH		
L41	1-407-500-00	MICRO INDUCTOR	4.7mH		
L1701	1-409-497-11	COIL (FILTER)			
		< FILTER >			
LPF41	1-239-845-11	FILTER, LOW PASS			
LPF42	1-239-845-11	FILTER, LOW PASS			
		< TRANSISTOR >			
Q1	8-729-201-27	TRANSISTOR	2SC2715-Y		
Q2	8-729-201-27	TRANSISTOR	2SC2715-Y		
Q3	8-729-201-27	TRANSISTOR	2SC2715-Y		
Q4	8-729-201-27	TRANSISTOR	2SC2715-Y		
Q5	8-729-424-08	TRANSISTOR	UN2111		
Q9	8-729-216-22	TRANSISTOR	2SA1162-G		
Q11	8-729-421-22	TRANSISTOR	UN2211		
Q12	8-729-421-22	TRANSISTOR	UN2211		
Q13	8-729-421-22	TRANSISTOR	UN2211		
Q14	8-729-421-22	TRANSISTOR	UN2211		
Q1701	8-729-424-08	TRANSISTOR	UN2111		
Q1702	8-729-027-43	TRANSISTOR	RT1N141C-TP-1		
Q1703	8-729-421-22	TRANSISTOR	UN2211		
		< RESISTOR >			
R1	1-249-401-11	CARBON	47	5%	1/4W F
R2	1-216-037-00	METAL CHIP	330	5%	1/10W
R3	1-216-037-00	METAL CHIP	330	5%	1/10W
R5	1-216-037-00	METAL CHIP	330	5%	1/10W
R6	1-216-081-00	METAL CHIP	22K	5%	1/10W
R7	1-216-049-91	METAL CHIP	1K	5%	1/10W
R8	1-216-037-00	METAL CHIP	330	5%	1/10W
R9	1-216-081-00	METAL CHIP	22K	5%	1/10W
R10	1-216-037-00	METAL CHIP	330	5%	1/10W
R11	1-216-081-00	METAL CHIP	22K	5%	1/10W
R12	1-216-057-00	METAL CHIP	2.2K	5%	1/10W
R13	1-216-037-00	METAL CHIP	330	5%	1/10W
R14	1-216-081-00	METAL CHIP	22K	5%	1/10W
R18	1-216-073-00	METAL CHIP	10K	5%	1/10W
R19	1-216-073-00	METAL CHIP	10K	5%	1/10W
R21	1-249-417-11	CARBON	1.0K	5%	1/4W
R22	1-249-417-11	CARBON	1.0K	5%	1/4W
R23	1-249-417-11	CARBON	1.0K	5%	1/4W
R24	1-247-807-31	CARBON	100	5%	1/4W
R25	1-249-417-11	CARBON	1.0K	5%	1/4W F
R26	1-249-437-11	CARBON	47K	5%	1/4W
R27	1-249-429-11	CARBON	10K	5%	1/4W
R28	1-249-417-11	CARBON	1.0K	5%	1/4W F
R29	1-216-061-00	METAL CHIP	3.3K	5%	1/10W
R30	1-216-186-00	METAL CHIP	330	5%	1/8W

Ref. No.	Part No.	Description			Remarks
R31	1-216-025-91	METAL CHIP	100	5%	1/10W
R32	1-249-425-11	CARBON	4.7K	5%	1/4W F
R33	1-249-425-11	CARBON	4.7K	5%	1/4W F
R34	1-216-065-91	METAL CHIP	4.7K	5%	1/10W
R35	1-216-214-00	METAL CHIP	4.7K	5%	1/8W
R36	1-216-025-91	METAL CHIP	100	5%	1/10W
R37	1-216-073-00	METAL CHIP	10K	5%	1/10W
R38	1-216-089-91	METAL CHIP	47K	5%	1/10W
R39	1-249-429-11	CARBON	10K	5%	1/4W
R40	1-216-089-91	METAL CHIP	47K	5%	1/10W
R41	1-216-013-00	METAL CHIP	33	5%	1/10W
R42	1-216-065-91	METAL CHIP	4.7K	5%	1/10W
R43	1-216-037-00	METAL CHIP	330	5%	1/10W
R44	1-216-001-00	METAL CHIP	10	5%	1/10W
R45	1-247-843-11	CARBON	3.3K	5%	1/4W F
R46	1-216-065-91	METAL CHIP	4.7K	5%	1/10W
R47	1-216-097-91	METAL CHIP	100K	5%	1/10W
R48	1-249-417-11	CARBON	1.0K	5%	1/4W F
R49	1-216-049-91	METAL CHIP	1.0K	5%	1/10W
R50	1-216-065-91	METAL CHIP	4.7K	5%	1/10W
R51	1-216-065-91	METAL CHIP	4.7K	5%	1/10W
R52	1-216-061-00	METAL CHIP	3.3K	5%	1/10W
R53	1-216-061-00	METAL CHIP	3.3K	5%	1/4W
R54	1-216-073-00	METAL CHIP	10K	5%	1/10W
R55	1-216-061-00	METAL CHIP	3.3K	5%	1/10W
R57	1-216-162-00	METAL CHIP	33	5%	1/8W
R58	1-216-013-00	METAL CHIP	33	5%	1/10W
R91	1-216-295-91	METAL CHIP	0	5%	1/10W
R92	1-216-073-00	METAL CHIP	10K	5%	1/10W
R1701	1-216-079-00	METAL CHIP	18K	5%	1/10W
R1702	1-216-085-00	METAL CHIP	33K	5%	1/10W
R1703	1-216-069-00	METAL CHIP	6.8K	5%	1/10W
R1704	1-216-076-00	METAL CHIP	13K	5%	1/10W
R1705	1-216-049-91	METAL CHIP	1.0K	5%	1/10W
R1706	1-216-049-91	METAL CHIP	1.0K	5%	1/10W
R1707	1-216-097-91	METAL CHIP	100K	5%	1/10W
R1708	1-216-095-00	METAL CHIP	82K	5%	1/10W
R1709	1-216-089-91	METAL CHIP	47K	5%	1/10W
R1710	1-216-073-00	METAL CHIP	10K	5%	1/10W
R1711	1-249-429-11	CARBON	10K	5%	1/4W
R1714	1-216-067-00	METAL CHIP	5.6K	5%	1/10W
R1715	1-216-067-00	METAL CHIP	5.6K	5%	1/10W
R1716	1-216-097-91	METAL CHIP	100K	5%	1/10W
R1717	1-216-097-91	METAL CHIP	100K	5%	1/10W
R1718	1-249-429-11	CARBON	10K	5%	1/4W
R1719	1-216-097-91	METAL CHIP	100K	5%	1/10W
R1720	1-249-434-11	CARBON	27K	5%	1/4W
R1721	1-216-073-00	METAL CHIP	10K	5%	1/10W
		< VARIABLE RESISTOR >			
RV41	1-238-600-11	RES, ADJ, CARBON 10K			
RV42	1-238-600-11	RES, ADJ, CARBON 10K			
RV1701	1-238-601-11	RES, ADJ, CARBON 22K			
RV1702	1-238-599-11	RES, ADJ, CARBON 4.7K			
		< TERMINAL >			
TM1	1-537-488-11	TERMINAL BOARD (ANT) (ANTENNA)			

TCB

Ref. No.	Part No.	Description			Remarks
		< TEST PIN>			
TP1701	1-536-354-00	PIN, POST			
TP1702	1-536-354-00	PIN, POST			
		< VIBRATOR >			
X21	1-760-549-31	VIBRATOR, CRYSTAL (4.5MHz)			
X21	1-760-549-11	VIBRATOR, CRYSTAL (4.5MHz)			
X41	1-767-825-21	FILTER, CERAMIC (10.7MHz)			
X42	1-527-981-00	FILTER, CERAMIC (450kHz)			
**********					
*	A-4303-597-A	TCB BOARD, COMPLETE (AEP, UK)			
		**********			
		< CAPACITOR >			
C1	1-163-141-00	CERAMIC CHIP	0.001uF	5%	50V
C2	1-126-967-11	ELECT	47uF	20%	16V
C3	1-163-038-91	CERAMIC CHIP	0.1uF		25V
C5	1-163-031-11	CERAMIC CHIP	0,01uF		50V
C6	1-163-038-91	CERAMIC CHIP	0.1uF		25V
C8	1-163-031-11	CERAMIC CHIP	0.01uF		50V
C9	1-163-031-11	CERAMIC CHIP	0.01uF		50V
C10	1-163-031-11	CERAMIC CHIP	0.01uF		50V
C16	1-163-038-91	CERAMIC CHIP	0.1uF		25V
C19	1-163-249-11	CERAMIC CHIP	82PF	5%	50V
C21	1-163-141-00	CERAMIC CHIP	0.001uF	5%	50V
C22	1-163-031-11	CERAMIC CHIP	0.01uF		50V
C23	1-163-235-11	CERAMIC CHIP	22PF	5%	50V
C24	1-163-239-11	CERAMIC CHIP	33PF	5%	50V
C26	1-126-967-11	ELECT	47uF	20%	16V
C28	1-126-967-11	ELECT	47uF	20%	16V
C29	1-162-306-11	CERAMIC	0.01uF	30%	16V
C30	1-126-961-11	ELECT	2.2uF	20%	50V
C31	1-163-031-11	CERAMIC CHIP	0.01uF		50V
C32	1-163-038-91	CERAMIC CHIP	0.1uF		25V
C33	1-163-038-91	CERAMIC CHIP	0.1uF		25V
C34	1-163-229-11	CERAMIC CHIP	12PF	5%	50V
C35	1-163-038-91	CERAMIC CHIP	0.1uF		25V
C36	1-163-141-00	CERAMIC CHIP	0.001uF	5%	50V
C37	1-163-141-00	CERAMIC CHIP	0.001uF	5%	50V
C39	1-163-141-00	CERAMIC CHIP	0.001uF	5%	50V
C40	1-126-967-11	ELECT	47uF	20%	16V
C41	1-163-031-11	CERAMIC CHIP	0.01uF		50V
C42	1-163-038-91	CERAMIC CHIP	0.1uF		25V
C43	1-163-031-11	CERAMIC CHIP	0.01uF		50V
C44	1-163-038-91	CERAMIC CHIP	0.1uF		25V
C45	1-163-077-00	CERAMIC CHIP	0.1uF		50V
C46	1-126-967-11	ELECT	47uF	20%	16V
C47	1-126-301-11	ELECT	1.0uF	20%	50V
C48	1-163-059-00	CERAMIC CHIP	0.01uF		50V
C49	1-126-964-11	ELECT	10uF	20%	50V
C50	1-126-960-11	ELECT	1.0uF	20%	50V
C51	1-126-959-11	ELECT	0.47uF	20%	50V
C52	1-126-960-11	ELECT	1.0uF	20%	50V
C53	1-126-964-11	ELECT	10uF	20%	50V
C54	1-104-396-11	ELECT	10uF	20%	16V
C55	1-104-396-11	ELECT	10uF	20%	16V
C56	1-104-396-11	ELECT	10uF	20%	16V
C57	1-163-017-00	CERAMIC CHIP	0.0047uF	10%	50V
C58	1-163-017-00	CERAMIC CHIP	0.0047uF	10%	50V

Ref. No.	Part No.	Description			Remarks
C59	1-163-809-11	CERAMIC CHIP	0.047uF	10%	25V
C60	1-163-809-11	CERAMIC CHIP	0.047uF	10%	25V
C61	1-126-301-11	ELECT	1uF	20%	50V
C62	1-163-031-11	CERAMIC CHIP	0.01uF		50V
C63	1-163-133-00	CERAMIC CHIP	470PF	5%	50V
C65	1-126-967-11	ELECT	47uF	20%	16V
C66	1-163-031-11	CERAMIC CHIP	0.01uF		50V
C67	1-126-162-11	ELECT	3.3uF	20%	50V
C68	1-163-031-11	CERAMIC	0.01uF		50V
C69	1-126-967-11	ELECT	47uF	20%	16V
C71	1-162-306-11	CERAMIC	0.01uF	30%	16V
C72	1-126-967-11	ELECT	47uF	20%	16V
C73	1-163-031-11	CERAMIC	0.01uF		50V
C74	1-163-031-11	CERAMIC	0.01uF		50V
C120	1-163-105-00	CERAMIC CHIP	33PF	5%	50V
C1751	1-164-159-11	CERAMIC	0.1uF		50V
C1752	1-126-967-11	ELECT	47uF	20%	16V
C1753	1-126-964-11	ELECT	10uF	20%	50V
C1754	1-162-291-31	CERAMIC	560PF	10%	50V
C1755	1-126-964-11	ELECT	10uF	20%	50V
C1756	1-126-961-11	ELECT	2.2uF	20%	50V
C1757	1-162-288-31	CERAMIC	330PF	10%	50V
C1758	1-163-031-11	CERAMIC CHIP	0.01uF		50V
C1759	1-163-135-00	CERAMIC CHIP	560PF	5%	50V
C1760	1-163-031-11	CERAMIC CHIP	0.01uF		50V
C1761	1-163-245-11	CERAMIC CHIP	56PF	5%	50V
C1762	1-163-245-11	CERAMIC CHIP	56PF	5%	50V
C1763	1-126-961-11	ELECT	2.2uF	20%	50V
		< FILTER >			
CF1	1-567-389-11	FILTER, CERAMIC			
CF2	1-760-393-11	FILTER, CERAMIC			
CF3	1-760-393-11	FILTER, CERAMIC			
		< CONNECTOR >			
CN1	1-774-292-21	HOUSING, CONNECTOR (PC BOARD) 15P			
		< DIODE >			
D21	8-719-976-99	DIODE DTZ5.1B			
D41	8-719-016-74	DIODE 1SS352			
D42	8-719-911-19	DIODE 1SS119-25			
D1751	8-719-016-74	DIODE 1SS352			
		< FRONT-END >			
FE1	1-693-357-11	FRONT END (4 GANG)			
FE2	1-233-514-11	ENCAPSULATED COMPONENT			
		< IC >			
IC21	8-759-288-54	IC LC72130			
IC41	8-759-495-82	IC LA1838			
IC1751	8-759-634-51	IC M5218AP			
IC1752	8-759-450-86	IC BU1922			
		< IFT >			
IFT41	1-409-636-11	TRANSFORMER, IF (CERAMIC FILTER)			

Ref. No.	Part No.	Description			Remarks
		< JUMPER RESISTOR >			
JR2	1-216-295-91	METAL CHIP	0	5%	1/10W
JR6	1-216-295-91	METAL CHIP	0	5%	1/10W
JR8	1-216-295-91	METAL CHIP	0	5%	1/10W
JR9	1-216-295-91	METAL CHIP	0	5%	1/10W
JR12	1-216-296-91	METAL CHIP	0	5%	1/8W
JR46	1-216-296-91	METAL CHIP	0	5%	1/8W
JR47	1-216-295-11	METAL CHIP	0	5%	1/10W
JR48	1-216-295-11	METAL CHIP	0	5%	1/10W
JR49	1-216-296-11	METAL CHIP	0	5%	1/8W
JR51	1-216-295-11	METAL CHIP	0	5%	1/10W
JR52	1-216-295-11	METAL CHIP	0	5%	1/10W
JR53	1-216-296-11	METAL CHIP	0	5%	1/8W
JR54	1-216-295-11	METAL CHIP	0	5%	1/10W
		< COIL >			
L2	1-414-142-11	MICRO INDUCTOR		1uH	
L3	1-410-521-11	MICRO INDUCTOR		100uH	
L4	1-410-515-11	INDUCTOR		33uH	
L41	1-407-500-00	MICRO INDUCTOR		4.7mH	
L1751	1-410-521-11	MICRO INDUCTOR		100uH	
		< FILTER >			
LPF41	1-239-845-11	FILTER, LOW PASS			
LPF42	1-239-845-11	FILTER, LOW PASS			
		< TRANSISTOR >			
Q1	8-729-201-27	TRANSISTOR	2SC2715-Y		
Q2	8-729-201-27	TRANSISTOR	2SC2715-Y		
Q3	8-729-201-27	TRANSISTOR	2SC2715-Y		
Q4	8-729-201-27	TRANSISTOR	2SC2715-Y		
Q5	8-729-424-08	TRANSISTOR	UN2111		
Q9	8-729-216-22	TRANSISTOR	2SA1162-G		
Q11	8-729-421-22	TRANSISTOR	UN2211		
Q12	8-729-421-22	TRANSISTOR	UN2211		
Q13	8-729-421-22	TRANSISTOR	UN2211		
Q14	8-729-421-22	TRANSISTOR	UN2211		
		< RESISTOR >			
R1	1-249-401-11	CARBON	47	5%	1/4W F
R2	1-216-037-00	METAL CHIP	330	5%	1/10W
R3	1-216-037-00	METAL CHIP	330	5%	1/10W
R5	1-216-037-00	METAL CHIP	330	5%	1/10W
R6	1-216-081-00	METAL CHIP	22K	5%	1/10W
R7	1-216-037-00	METAL CHIP	330	5%	1/10W
R8	1-216-037-00	METAL CHIP	330	5%	1/10W
R9	1-216-081-00	METAL CHIP	22K	5%	1/10W
R10	1-216-037-00	METAL CHIP	330	5%	1/10W
R11	1-216-081-00	METAL CHIP	22K	5%	1/10W
R12	1-216-037-00	METAL CHIP	330	5%	1/10W
R13	1-216-037-00	METAL CHIP	330	5%	1/10W
R14	1-216-081-00	METAL CHIP	22K	5%	1/10W
R18	1-216-073-00	METAL CHIP	10K	5%	1/10W
R19	1-216-073-00	METAL CHIP	10K	5%	1/10W
R21	1-216-049-91	METAL CHIP	1.0K	5%	1/10W
R22	1-216-049-91	METAL CHIP	1.0K	5%	1/10W
R23	1-216-049-91	METAL CHIP	1.0K	5%	1/10W
R24	1-216-025-91	METAL CHIP	100	5%	1/10W
R25	1-249-417-11	CARBON	1K	5%	1/4W F

Ref. No.	Part No.	Description			Remarks
R26	1-249-437-11	CARBON	47K	5%	1/4W
R27	1-249-429-11	CARBON	10K	5%	1/4W
R28	1-249-417-11	CARBON	1K	5%	1/4W F
R29	1-216-061-00	METAL CHIP	3.3K	5%	1/10W
R30	1-216-186-00	METAL CHIP	330	5%	1/8W
R31	1-216-025-91	METAL CHIP	100	5%	1/10W
R32	1-249-425-11	CARBON	4.7K	5%	1/4W F
R33	1-249-425-11	CARBON	4.7K	5%	1/4W F
R34	1-216-065-91	METAL CHIP	4.7K	5%	1/10W
R35	1-216-214-00	METAL CHIP	4.7K	5%	1/8W
R36	1-216-025-91	METAL CHIP	100	5%	1/10W
R37	1-216-073-00	METAL CHIP	10K	5%	1/10W
R38	1-216-089-91	METAL CHIP	47K	5%	1/10W
R39	1-249-429-11	CARBON	10K	5%	1/4W
R40	1-216-089-91	METAL CHIP	47K	5%	1/10W
R41	1-216-013-00	METAL CHIP	33	5%	1/10W
R42	1-216-065-91	METAL CHIP	4.7K	5%	1/10W
R43	1-216-037-00	METAL CHIP	330	5%	1/10W
R44	1-216-001-00	METAL CHIP	10	5%	1/10W
R45	1-247-843-11	CARBON	3.3K	5%	1/4W F
R46	1-216-065-91	METAL CHIP	4.7K	5%	1/10W
R47	1-216-097-91	METAL CHIP	100K	5%	1/10W
R48	1-249-417-11	CARBON	1K	5%	1/4W F
R49	1-216-049-91	METAL CHIP	1.0K	5%	1/10W
R50	1-216-065-91	METAL CHIP	4.7K	5%	1/10W
R51	1-216-065-91	METAL CHIP	4.7K	5%	1/10W
R52	1-216-061-00	METAL CHIP	3.3K	5%	1/10W
R53	1-216-061-00	METAL CHIP	3.3K	5%	1/10W
R54	1-216-073-00	METAL CHIP	10K	5%	1/10W
R55	1-216-061-00	METAL CHIP	3.3K	5%	1/10W
R57	1-216-162-00	METAL CHIP	33	5%	1/8W
R58	1-216-013-00	METAL CHIP	33	5%	1/10W
R91	1-216-295-91	METAL CHIP	0	5%	1/10W
R92	1-216-073-00	METAL CHIP	10K	5%	1/10W
R1751	1-247-807-31	CARBON	100	5%	1/4W
R1752	1-216-073-00	METAL CHIP	10K	5%	1/10W
R1753	1-216-067-00	METAL CHIP	5.6K	5%	1/10W
R1754	1-216-097-91	METAL CHIP	100K	5%	1/10W
R1755	1-216-097-91	METAL CHIP	100K	5%	1/10W
R1756	1-249-401-11	CARBON	47	5%	1/4W F
R1757	1-216-295-91	METAL CHIP	0	5%	1/10W
		< VARIABLE RESISTOR >			
RV41	1-238-600-11	RES, ADJ, CARBON 10K			
RV42	1-238-600-11	RES, ADJ, CARBON 10K			
		< TERMINAL >			
TM1	1-537-488-11	TERMINAL BOARD (ANT) (ANTENNA)			
		< VIBRATOR >			
X21	1-760-549-11	VIBRATOR, CRYSTAL (4.5MHz)			
X41	1-767-825-21	FILTER, CERAMIC (10.7MHz)			
X42	1-527-981-00	FILTER, CERAMIC (450KHz)			
X1751	1-579-900-21	VIBRATOR, CRYSTAL (4.332MHz)			

****

Ref. No.	Part No.	Description	Remarks
		MISCELLANEOUS	
		**********	
3	1-773-125-11	WIRE (FLAT TYPE) (19 CORE)	
153	1-233-545-31	ENCAPSULATED COMPONENT (TCB) (TH, AUS)	
153	1-233-546-31	ENCAPSULATED COMPONENT (TCB)	(EA, SP, MY)
⚠160	1-575-653-11	CORD, POWER (TH)	
⚠160	1-696-847-11	CORD, POWER (AUS)	
⚠160	1-751-520-11	CORD, POWER (UK)	
⚠160	1-777-071-21	CORD, POWER (AEP, EE, EA, CIS, SP, MY)	
⚠161	1-569-008-21	ADAPTOR, CONVERSION 2P (EA, SP, MY)	
M901	1-763-117-11	FAN, DC	
⚠T901	1-431-900-11	TRANSFORMER, POWER (AEP, UK, EE, CIS)	
⚠T901	1-431-901-11	TRANSFORMER, POWER (EA, SP, MY, TH, AUS)	

****

****
HARDWARE LIST
****

#1	7-685-647-79	SCREW +BVTP 3 × 10 TYPE2 N-S
#2	7-685-646-79	SCREW +BVTP 3 × 8 TYPE2 N-S
#3	7-621-775-20	SCREW +B 2.6 × 5
#4	7-685-650-79	SCREW +BVTP 3 × 16 TYPE2 IT-3
#5	7-685-881-09	SCREW +BVTT 4 × 8 (S)
#6	7-685-872-09	SCREW +BVTT 3 × 8 (S)
#7	7-685-546-19	SCREW +BTP 3 × 8 TYPE2 N-S

The components identified by mark ⚠ or dotted line with mark ⚠ are critical for safety.
Replace only with part number specified.

9-922-941-11

Sony Corporation
Home A&V Products Company

98G1672-1
Printed in Japan ©1998.7
Published by General Assurance Dept.
(Shibaura)